TRANSMISSION/TRANSAXLE

05
SECTION

OUTLINE 05-00
ON-BOARD DIAGNOSTIC. . . . 05-02
CLUTCH [G35M-R] 05-10A
CLUTCH [A26M-R]. 05-10B
MANUAL TRANSAXLE
[G35M-R] 05-15A
MANUAL TRANSAXLE
[A26M-R] 05-15B
MANUAL TRANSAXLE
SHIFT MECHANISM
[G35M-R]. 05-16A
MANUAL TRANSAXLE
SHIFT MECHANISM
[A26M-R] 05-16B
AUTOMATIC TRANSAXLE. . . . 05-17
AUTOMATIC TRANSAXLE
SHIFT MECHANISM 05-18

05–00 OUTLINE

TRANSMISSION/TRANSAXLE ABBREVIATIONS 05–00–1
TRANSMISSION/TRANSAXLE FEATURES 05–00–2
TRANSMISSION/TRANSAXLE SPECIFICATIONS 05–00–2

TRANSMISSION/TRANSAXLE ABBREVIATIONS

DPE050000000T01

ACC	Accessories
ATF	Automatic Transaxle Fluid
ATX	Automatic Transaxle
B+	Battery Positive Voltage
CCM	Comprehensive Component Monitor
CPU	Central Processing Unit
DC	Drive Cycle
DLC	Data Link Connector
DTC	Diagnostic Trouble Code
EC-AT	Electronically Controlled Automatic Transaxle
GND	Ground
MIL	Malfunction Indicator Lamp
MTX	Manual Transaxle
O/D	Overdrive
OBD	On-board Diagnostic
PCM	Powertrain Control Module
PID	Parameter Identification
RPM	Revolution Per Minute
TCC	Torque Converter Clutch
TFT	Transaxle Fluid Temperature
TP	Throttle Position
TR	Transaxle Range
VSS	Vehicle Speed Sensor
1GR	First Gear
2GR	Second Gear
3GR	Third Gear
4GR	Fourth Gear
5GR	Fifth Gear
6GR	Sixfth Gear

TRANSMISSION/TRANSAXLE FEATURES

DPE050000000T02

CLUTCH	
Improved operability	• Hydraulic clutch control mechanism used
Reduced noise and vibration	• Dual-mass flywheel adopted (A26M-R)
Improved durability	• Clutch cover with wear assurance function adopted (A26M-R)
MTX [G35M-R]	
Improved operability	• Linked, triple-cone synchronizer mechanism adopted for 1GR and 2GR • Linked, double-cone synchronizer mechanism adopted for 3GR and 4GR • Double-ball construction detent balls adopted (small balls positioned on the backside of the balls inserted in the rod end) • Optimal control rod end load characteristics • Special surface finish (bushings with teflon coating for low friction resistance adopted) used on shafts of linkage parts (shift rod, crank lever, control rod) • Optimal positioning of reverse link support/leverage points
Improved reliability	• Double engagement prevention mechanism (interlock mechanism) adopted
Mis-shift prevention	• Cam-type reverse lock-out mechanism adopted
MTX [A26M-R]	
Improved operability	• Ball-type synchromesh mechanism adopted (Forward) • Lever-type synchromesh mechanism adopted (Reverse) • Triple-cone synchronizer mechanism adopted for 1GR, 2GR and 3GR • Double-cone synchronizer mechanism adopted for 4GR
Improved reliability	• Double engagement prevention mechanism (interlock mechanism) adopted
MANUAL TRANSAXLE SHIFT MECHANISM	
Mis-shift prevention	• Reverse lock-out mechanism adopted (A26M-R)
ATX [FN4A-EL]	
Superior shift quality	• Direct electric shift control adopted • Feedback control system adopted • Centrifugal balance clutch chamber adopted • Engine-transaxle total control system adopted
High efficiency, compactness, lightweight	• Miniature trochoid gear oil pump with torque converter direct drive adopted
Improved reliability	• Variable resistor type TR switch has been adopted
Improved driveability	• Control feature for climbing/descending hills adopted, improving driveability when climbing/descending
Improved marketability	• Sport AT adopted
Improved operability	• A shift mechanism which the selector lever is located on the center of the dashboard has been adopted
Mis-shift prevention	• A key interlock system has been adopted • A shift-lock system has been adopted
Emergency bypass assurance	• A shift-lock release mechanism has been adopted

TRANSMISSION/TRANSAXLE SPECIFICATIONS

DPE050000000T08

Clutch

Item			Specification	
Engine type			**MZR-CD (RF Turbo)**	**LF, L8**
Manual transaxle type			**A26M-R**	**G35M-R**
Clutch control			Hydraulic	
Clutch cover	Spring type		Diaphragm	
	Set load	(N {kgf, lbf})	10,100 {1,030, 2,271}	5,200 {531, 1,169}
Clutch disc	Outer diameter	(mm {in})	250 {9.84}	228 {8.98}
	Inner diameter	(mm {in})	155 {6.10}	170 {6.69}
Clutch pedal	Type		Suspended	
	Pedal ratio		5.5	
	Full stroke	(mm {in})	135 {5.31}	
Clutch master cylinder inner diameter		(mm {in})	19.12 {0.753}	
Clutch release cylinder inner diameter		(mm {in})	23.81 {0.937}	20.64 {0.813}

Item	Specification	
Engine type	**MZR-CD (RF Turbo)**	**LF, L8**
Manual transaxle type	**A26M-R**	**G35M-R**
Clutch fluid type	SAE J1703, FMVSS 116 DOT-3 or DOT-4	

Manual Transaxle [G35M-R]

Item			Specification	
Engine type			**L8**	**LF**
Manual transaxle type			**G35M-R**	
Operation system			Cable	
Shift assist	Forward		Synchromesh	
	Reverse		Selective sliding and synchromesh	
Gear ratio	1GR		3.666	3.307
	2GR		2.059	1.842
	3GR		1.392	1.310
	4GR		1.030	
	5GR		0.795	
	Reverse		3.454	
Final gear ratio			4.388	4.588
Oil	Grade		API service GL-4 or GL-5	
	Viscosity	All season	SAE 75W-90	
		Above 10°C {50°F}	SAE 80W-90	
	Capacity (approx. quantity)	(L {US qt, Imp qt})	2.87 {3.03, 2.53}	

Manual Transaxle [A26M-R]

Item			Specification
Engine type			**MZR-CD (RF Turbo)**
Manual transaxle type			**A26M-R**
Operation system			Cable
Shift assist	Forward		Synchromesh
	Reverse		Synchromesh (Lever type)
Gear ratio	1GR		3.538
	2GR		1.913
	3GR		1.218
	4GR		0.880
	5GR		0.809
	6GR		0.673
	Reverse		3.831
Final gear ratio			1GR, 2GR, 3GR, 4GR: 3.611 5GR, 6GR, Reverse: 3.095
Oil	Grade		API service GL-4 or GL-5
	Viscosity	All season	SAE 75W-90
		Above 10°C {50°F}	SAE 75W-90
	Capacity (approx. quantity)	(L {US qt, Imp qt})	2.55 {2.69, 2.24}

Manual Transaxle Shift Mechanism

Item	Specification	
Transaxle type	**G35M-R**	**A26M-R**
Operation system	Cable	

Automatic Transaxle [FN4A-EL]

Item			Specification
Engine type			**LF**
Gear ratio		1GR	2.816
		2GR	1.553
		3GR	1.000
		4GR	0.695
		Reverse	2.279
Final gear ratio			4.416
ATF	Type		ATF M-V
	Capacity (Approx. quantity)	(L {US qt, Imp qt})	7.2 {7.6, 6.3}
Torque converter stall torque ratio			2.1
Hydraulic system (Number of drive/driven gear plates)	Forward clutch		4/4
	3-4 clutch		3/3
	Reverse clutch		2/2
	Low and reverse brake		5/5
Band servo	Servo diameter (Piston outer dia.)	(mm {in})	64.6 {2.54}
Front planetary gear (Number of teeth)	Front sun gear		49
	Front pinion gear		20
	Front internal gear		89
Rear planetary gear (Number of teeth)	Rear sun gear		43
	Rear pinion gear		27
	Rear internal gear		98
Primary gear (number of teeth)			86
Secondary gear (number of teeth)			82
Output gear (number of teeth)			19
Ring gear (number of teeth)			88

Automatic Transaxle Shift Mechanism Specifications

Item	Specification
Operation system	Cable
Selector lever type	Sport AT

05–02 ON-BOARD DIAGNOSTIC

ON-BOARD DIAGNOSTIC (OBD) SYSTEM OUTLINE [FN4A-EL] 05–02–1
ON-BOARD DIAGNOSTIC (OBD) SYSTEM BLOCK DIAGRAM [FN4A-EL] 05–02–1
MALFUNCTION DETECTION FUNCTION [FN4A-EL] 05–02–2
MEMORY FUNCTION [FN4A-EL]. 05–02–3
MALFUNCTION INDICATION FUNCTION [FN4A-EL]. 05–02–3
FAIL-SAFE FUNCTION [FN4A-EL] 05–02–3
PARAMETER IDENTIFICATION (PID) DATA MONITORING FUNCTION [FN4A-EL]. 05–02–6
SIMULATION FUNCTION [FN4A-EL] 05–02–6
DLC-2 OUTLINE [FN4A-EL] 05–02–6

ON-BOARD DIAGNOSTIC (OBD) SYSTEM OUTLINE [FN4A-EL]

DPE050200000T01

- The OBD system has the following functions:
  - — Malfunction detection function: detects malfunctions of the input/output devices and system components of the ATX.
  - — Fail-safe function: fixes the output device function and input value of the sensors/switches to ensure minimum vehicle drivability when a malfunction is detected.
  - — Memory function: stores the DTC when a malfunction is detected.
  - — PID data monitoring function: monitors the input/output signal and calculated value of the PCM and sends the monitoring data to the WDS or equivalent.
  - — Simulation function: Allows override operation of simulation items for input/output system parts preset in the PCM.

ON-BOARD DIAGNOSTIC (OBD) SYSTEM BLOCK DIAGRAM [FN4A-EL]

DPE050200000T02

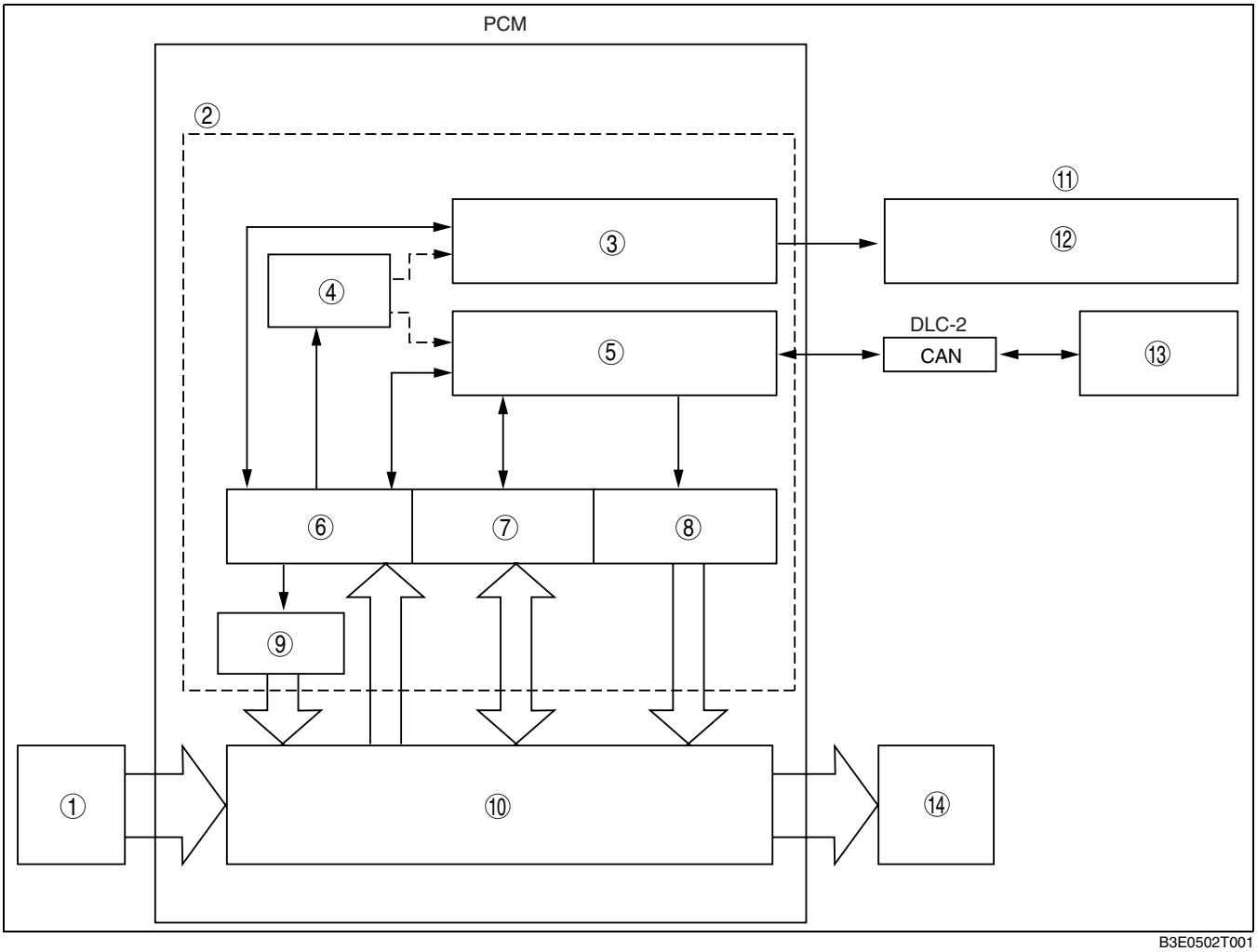

B3E0502T001

1	Input parts
2	OBD system

3	Malfunction indication function
4	Memory function

5	Serial communication
6	Malfunction detection function
7	PID data monitoring function
8	Simulation function
9	Fail-safe function
10	Transaxle control system
11	Instrument cluster
12	AT warning light or MIL
13	WDS or equivalent
14	Output parts

MALFUNCTION DETECTION FUNCTION [FN4A-EL]

DPE050200000T03

Malfunction Detection Function

- In the malfunction detection function, the PCM detects malfunctions in the automatic transmission while driving.
- When vehicle driving conditions correspond with a preset malfunction detection condition, the PCM determines that the automatic transmission has a malfunction and stores the corresponding DTC.
- When a malfunction is detected, stored DTCs can be retrieved using the WDS or equivalent connected to the DLC-2.

DTC Table

×: Available

DTC No.	Condition	MIL	AT warning light illuminates	DC	Monitor item	Memory function
P0706	Transaxle range (TR) switch circuit range/performance	ON	YES	2	CCM	X
P0707	Transaxle range (TR) switch circuit low input	ON	YES	1	CCM	X
P0708	Transaxle range (TR) switch circuit high input	ON	YES	2	CCM	X
P0711	Transaxle fluid temperature (TFT) sensor circuit range/ performance (stuck)	ON	NO	2	CCM	X
P0712	Transaxle fluid temperature (TFT) sensor circuit malfunction (short to ground)	ON	YES	1	CCM	X
P0713	Transaxle fluid temperature (TFT) sensor circuit malfunction (open circuit)	ON	YES	1	CCM	X
P0715	Input/turbine speed sensor circuit malfunction	ON	YES	1	CCM	X
P0720	Vehicle speed sensor (VSS) circuit malfunction	ON	YES	2	CCM	X
P0731	Gear 1 incorrect (incorrect gear ratio detected)	OFF	YES	1	CCM	X
P0732	Gear 2 incorrect (incorrect gear ratio detected)	OFF	YES	1	CCM	X
P0733	Gear 3 incorrect (incorrect gear ratio detected)	OFF	YES	1	CCM	X
P0734	Gear 4 incorrect (incorrect gear ratio detected)	OFF	YES	1	CCM	X
P0741	Torque converter clutch (TCC) (stuck off)	OFF	YES	1	CCM	X
P0742	Torque converter clutch (TCC) (stuck on)	OFF	YES	1	CCM	X
P0745	Pressure control solenoid malfunction	OFF	YES	1	CCM	X
P0751	Shift solenoid A stuck off	ON	YES	2	CCM	X
P0752	Shift solenoid A stuck on	ON	YES	2	CCM	X
P0753	Shift solenoid A malfunction (electrical)	ON	YES	1	CCM	X
P0756	Shift solenoid B stuck off	ON	YES	2	CCM	X
P0757	Shift solenoid B stuck on	ON	YES	2	CCM	X
P0758	Shift solenoid B malfunction (electrical)	ON	YES	1	CCM	X
P0761	Shift solenoid C stuck off	ON	YES	2	CCM	X
P0762	Shift solenoid C stuck on	ON	YES	2	CCM	X
P0763	Shift solenoid C malfunction (electrical)	ON	YES	1	CCM	X
P0766	Shift solenoid D stuck off	ON	YES	2	CCM	X
P0767	Shift solenoid D stuck on	OFF	YES	2	CCM	X
P0768	Shift solenoid D malfunction (electrical)	ON	YES	1	CCM	X
P0771	Shift solenoid E stuck off	ON	YES	2	CCM	X
P0772	Shift solenoid E stuck on	ON	YES	2	CCM	X

DTC No.	Condition	MIL	AT warning light illuminates	DC	Monitor item	Memory function
P0773	Shift solenoid E malfunction (electrical)	ON	YES	1	CCM	X
P0841	Oil pressure switch circuit malfunction	OFF	NO	2	CCM	X
P0894	Forward clutch torque transmission	OFF	YES	1	CCM	X

MEMORY FUNCTION [FN4A-EL]

DPE050200000T04

- The memory function stores malfunction information detected in the malfunction detection function. Once malfunction information is stored, the memory will not be cleared even when the ignition switch is turned off (LOCK position) or the malfunction is repaired.
- The stored memory (malfunction information) can be cleared using the WDS or equivalent, or by disconnecting the negative battery cable.

MALFUNCTION INDICATION FUNCTION [FN4A-EL]

DPE050200000T05

- The malfunction indication function illuminates the MIL or AT warning light when the malfunction detection function when it determines there is a malfunction.

FAIL-SAFE FUNCTION [FN4A-EL]

DPE050200000T06

- In the fail-safe function, minimum vehicle drivability is obtained by changing the signals that are determined to be malfunctions by the malfunction detection function to the preset values, and limiting PCM control.

DTC No.	On-board diagnostic function	Detection condition	Fail-safe	TCC
P0706	Transaxle range (TR) switch circuit range/ performance	• No TR signal (P, R, N or D range/ position) input to PCM terminal 1S when the engine speed is **530 rpm or more**, vehicle speed is **20 km/h {12 mph} or more** and voltage at PCM terminal 1S is **0.5 V or more**.	• Inhibits gear shifting and maximizes line pressure	Disabled
P0707	Transaxle range (TR) switch circuit low input	• Input voltage from the TR switch to PCM terminal 1S is **0.5 V or less** when the engine speed is **530 rpm or more** and vehicle speed is **20 km/h {12 mph} or more**.	• Inhibits gear shifting and maximizes line pressure	Disabled
P0708	Transaxle range (TR) switch circuit high input	• Input voltage from the TR switch to PCM terminal 1S is **4.79 V or more** when the engine speed is **530 rpm or more** and vehicle speed is **20 km/h {12 mph} or more**.	• Inhibits gear shifting and maximizes line pressure	Disabled
P0711	Transaxle fluid temperature (TFT) sensor circuit range/performance (Stuck)	• Input voltage from the TFT sensor to PCM terminal 1U and 1AA is maintained at **0.03 V or less** when **180 s** have passed after the engine is started and the vehicle is driven for **90 s or more** at vehicle speed **between 25—59 km/h {15—36 mph}**, and then **60 km/h {37 mph} or more** for **60 s or more**.	N/A	Disabled
P0712	Transaxle fluid temperature (TFT) sensor circuit malfunction (short to ground)	• Input voltage from the TFT sensor to PCM terminal 1U and 1AA is maintained at **0.06 V or less** when the vehicle speed is **20 km/h {12 mph} or more**.	• Sets temperature to cold condition and maximizes line pressure	Disabled
P0713	Transaxle fluid temperature (TFT) sensor circuit malfunction (open circuit)	• Input voltage from the TFT sensor to PCM terminal 1U and 1AA is maintained at **4.67 V or more** when vehicle speed is **20 km/h {12 mph} or more**.	• Sets temperature to cold condition	Disabled
P0715	Input/turbine speed sensor circuit malfunction	• No input/turbine speed sensor signal to PCM terminals 1M and 1Q when the vehicle speed is **41 km/h {25 mph} or more** and selector lever position is at D or M range.	• Inhibits 4GR	Disabled

DTC No.	On-board diagnostic function	Detection condition	Fail-safe	TCC
P0720	Vehicle speed sensor (VSS) circuit malfunction	• No VSS signal is input to PCM terminal 1J when and engine coolant temperature is **60 °C {140 °F} or more**, input/turbine speed sensor signal is **1,500 rpm or more** and selector lever position is at D or M range.	• Vehicle speed signal calculated from input/ turbine speed sensor	Enabled
P0731	Gear 1 incorrect (incorrect gear ratio detected)	• Revolution ratio of the forward clutch drum to differential gear case revolution is **2.185 or less** while in 1GR.	• Inhibits 1GR and maximizes line pressure	Enabled
P0732	Gear 2 incorrect (incorrect gear ratio detected)	• Revolution ratio of the forward clutch drum to differential gear case revolution is **1.277 or less** or **2.185 or more** while in 2GR.	• Inhibits 2GR and maximizes line pressure	Enabled
P0733	Gear 3 incorrect (incorrect gear ratio detected)	• Revolution ratio of the forward clutch drum to differential gear case revolution is **0.848 or less** or **2.185 or more** while in 3GR. • Revolution ratio of the forward clutch drum to differential gear case revolution is **within 1.404—1.704** while in 3GR (TCC no operating).	N/A	Enabled
P0734	Gear 4 incorrect (incorrect gear ratio detected)	• Revolution ratio of the forward clutch drum to differential gear case revolution is **0.6 or less** or **1.277 or more** while in 4GR. • Revolution ratio of the forward clutch drum to differential gear case revolution is **within 0.91—1.09** while in 4GR (TCC no operating).	• Inhibits 4GR and maximizes line pressure	Enabled
P0741	Torque converter clutch (TCC) (stuck off)	• Difference between the engine speed and turbine speed is **more than 100 rpm** while TCC is operating.	• Inhibits TCC and maximizes line pressure	Disabled
P0742	Torque converter clutch (TCC) (stuck on)	• Difference between the engine speed and turbine speed is **50 rpm or less** while TCC is not operating.	• Inhibits TCC and maximizes line pressure	Disabled
P0745	Pressure control solenoid malfunction	• Voltage is stuck at **0 V** or **B+** at pressure control solenoid control terminal 1G of the PCM when the solenoid valve operates according to PCM calculation.	N/A	Enabled
P0751	Shift solenoid A stuck off	• Revolution ratio of the forward clutch drum to differential gear case revolution is **within 0.91—1.09** in 4GR and DTCs not output	• Inhibits 4GR and TCC and maximizes line pressure	Disabled
P0752	Shift solenoid A stuck on	• Input/turbine speed sensor signal is **187.5 rpm or more** in D range	• Inhibits 1GR, 2GR, and 3GR and maximizes line pressure	Enabled
P0753	Shift solenoid A malfunction (electrical)	• Voltage is stuck at **0 V** or **B+** at shift solenoid A control terminal 1B of the PCM when the solenoid valve operates according to PCM calculation.	• Inhibits 4GR and TCC and maximizes line pressure	Disabled
P0756	Shift solenoid B stuck off	• Revolution ratio of the forward clutch drum to differential gear case revolution is **2.185 or less** in 1GR and DTCs not output.	• Inhibits 1GR and 4GR and maximizes line pressure	Enabled
P0757	Shift solenoid B stuck on	• Revolution ratio of the forward clutch drum to differential gear case revolution is **1.277 or less** or **2.185 or more** in D range 2GR. • Revolution ratio of the forward clutch drum to differential gear case revolution is **0.6 or less** or **1.277 or more** in D range 4GR.	• Inhibits 2GR and 4GR and maximized line pressure	Enabled

DTC No.	On-board diagnostic function	Detection condition	Fail-safe	TCC
P0758	Shift solenoid B malfunction (electrical)	• Voltage is stuck at **0 V** or **B+** at shift solenoid B control terminal 1C of the PCM when the solenoid valve operates according to PCM calculation.	• Inhibits 1GR and 4GR and maximizes line pressure	Enabled
P0761	Shift solenoid C stuck off	• Revolution ratio of the forward clutch drum to differential gear case revolution is **2.185 or less** in D range 1GR. • Revolution ratio of the forward clutch drum to differential gear case revolution is **1.277 or less** or **2.185 or more** in D range 2GR.	• Inhibits 1GR and 2GR and maximizes line pressure	Enabled
P0762	Shift solenoid C stuck on	• Revolution ratio of the forward clutch drum to differential gear case revolution is **within 1.404—1.704** in D range 3GR.	• Inhibits 3GR and 4GR and maximizes line pressure	Enabled
P0763	Shift solenoid C malfunction (electrical)	• Voltage is stuck at **0 V** or **B+** at shift solenoid C control terminal 1D of the PCM when the solenoid valve operates according to PCM calculation.	• Inhibits 1GR and 2GR and maximizes line pressure	Enabled
P0766	Shift solenoid D stuck off	• Revolution ratio of the forward clutch drum to differential gear case revolution is **0.6 or less** or **1.277 or more** in D range 4GR.	• Inhibits 4GR and maximizes line pressure	Enabled
P0767	Shift solenoid D stuck on	• Revolution ratio of the forward clutch drum to differential gear case revolution is **0.848 or less** or **2.185 or more** in D range 3GR.	• Inhibits 2GR, 4GR, and TCC and maximizes line pressure	Disabled
P0768	Shift solenoid D malfunction (electrical)	• Voltage is stuck at **0 V** or **B+** at shift solenoid D valve control terminal 1E of the PCM when the solenoid valve operates according to PCM calculation.	• Inhibits 4GR and maximizes line pressure	Enabled
P0771	Shift solenoid E stuck off	• Difference between engine speed and turbine speed is **more than 100 rpm** while driving in 4GR is at D range during TCC operation.	• Inhibits TCC and maximized line pressure	Disabled
P0772	Shift solenoid E stuck on	• Difference between the engine speed and turbine speed is **50 rpm or less** while driving in 4GR at D range while TCC is not operating.	• Inhibits 1GR and maximizes line pressure	Enabled
P0773	Shift solenoid E malfunction (electrical)	• Voltage is stuck at **0 V** or **B+** at shift solenoid E control terminal 1F of the PCM when the solenoid valve operates according to PCM calculation.	• Inhibits TCC and maximized line pressure	Disabled
P0841	Oil pressure switch circuit malfunction	• No oil pressure switch signal input when revolution ratio of forward clutch drum revolution to differential gear case revolution is **0.91 or less** or **3.08 or more** while in 1, 2 or 3GR. • Oil pressure switch signal input when revolution ratio of forward clutch drum revolution to differential gear case revolution is **0.64 or less** or **0.82 or more** while in 4GR.	N/A	Enabled
P0894	Forward clutch torque transmission	• Turbine speed does not fall to **less than 187 rpm 3 s or more** after starting the engine with the vehicle stopped (brake applied) and the selector lever shifted to D range from N position.	• Driving restricted to 4GR	Enabled

PARAMETER IDENTIFICATION (PID) DATA MONITORING FUNCTION [FN4A-EL]

DPE050200000T07

- The PID mode allows access to certain data values, analog and digital input and output, calculations and system state information.

Monitor Item Table

Item	Definition	Unit/ Condition		PCM terminal
DWN SW	Down switch	On/Off		1P
GEAR	Gear commanded by module	1/2/3/4		N/A
HTM_CNT	Indicates number of high oil temperature mode (ATF temperature at 130 °C {266 °F} or more) operations	—		N/A
HTM_DIS	Indicates travel distance after operation of high oil temperature mode (ATF temperature at 130 °C {266 °F} or more)	km		N/A
LINEDES	Target line pressure	kPa	inHg	N/A
LPS	Pressure control solenoid control signal in PCM	A		1H 1G
MNL SW	M range switch	On/Off		1O
OP_SW_B	Oil pressure switch	On/Off		1L
OSS	Output shaft speed	RPM		1J
SSA/SS1	Shift solenoid A control signal in PCM	%		1B
SSB/SS2	Shift solenoid B control signal in PCM	%		1C
SSC/SS3	Shift solenoid C control signal in PCM	%		1D
TFT	ATF temperature	°C	°F	1U
TFTV	ATF temperature signal voltage	V		1U
THOP	Throttle position signal in PCM	%		2I
TR	Transaxle range	P/R/N/D		1S
TR_SENS	TR switch signal voltage	V		1S
TSS	Input/turbine speed	RPM		1M 1Q
UP SW	Up switch	On/Off		1K

SIMULATION FUNCTION [FN4A-EL]

DPE050200000T08

- By using the WDS or equivalent, simulation items for input/output parts preset in the PCM can be optionally selected and operated regardless of PCM control conditions.

Simulation Item Table

X: Available

Simulation item	Applicable component	Unit/Condition	Operation		PCM terminal
			IG ON	Idle	
LPS	Pressure control solenoid control signal in PCM	%		X	1H 1G
SSA/SS1	Shift solenoid A control signal in PCM	%		X	1B
SSB/SS2	Shift solenoid B control signal in PCM	%		X	1C
SSC/SS3	Shift solenoid C control signal in PCM	%		X	1D
SSD/SS4	Shift solenoid D control signal in PCM	On/Off		X	1E
SSE_SS5	Shift solenoid E control signal in PCM	On/Off		X	1F

DLC-2 OUTLINE [FN4A-EL]

DPE050200000T09

- A connector (DLC-2) conforming to International Organization for Standardization (ISO) standards has been adopted.
- Shape and terminal arrangement as stipulated by the ISO 15031-3 (SAE J1962) international standard has been adopted for this connector. The connector has a 16-pin construction that includes the KLN, CAN_H, CAN_L, GND1, GND2 and B+ terminals.

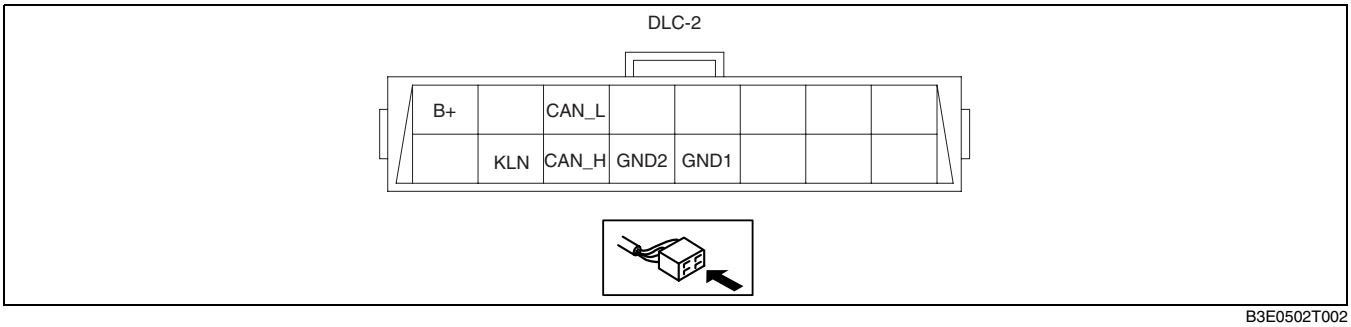

B3E0502T002

Terminal	Function
KLN	Serial communication terminal (malfunction diagnosis use)
CAN_L	Serial communication terminal (Lo)
CAN_H	Serial communication terminal (Hi)
GND1	Body ground terminal
GND2	Serial communication ground terminal
B+	Battery power supply terminal

05–17 AUTOMATIC TRANSAXLE

AUTOMATIC TRANSAXLE OUTLINE [FN4A-EL] 05–17–2
AUTOMATIC TRANSAXLE CROSS-SECTIONAL VIEW [FN4A-EL] 05–17–2
OUTLINE OF OPERATION [FN4A-EL]. . 05–17–3
EC-AT OPERATION CHART [FN4A-EL] 05–17–5
POWER FLOW OUTLINE [FN4A-EL]. . . 05–17–5
POWER FLOW STRUCTURE [FN4A-EL] 05–17–5
POWER FLOW OPERATION [FN4A-EL] 05–17–7
CENTRIFUGAL BALANCE CLUTCH OUTLINE [FN4A-EL] 05–17–14
CENTRIFUGAL BALANCE CLUTCH STRUCTURE [FN4A-EL] 05–17–14
CENTRIFUGAL BALANCE CLUTCH OPERATION [FN4A-EL] 05–17–14
OUTPUT GEAR OUTLINE [FN4A-EL] . . 05–17–14
TORQUE CONVERTER OUTLINE [FN4A-EL] 05–17–15
OIL PUMP OUTLINE [FN4A-EL] 05–17–16
OIL PUMP STRUCTURE [FN4A-EL] . . . 05–17–17
OIL PUMP OPERATION [FN4A-EL] 05–17–18
CONTROL VALVE BODY OUTLINE [FN4A-EL] 05–17–18
FORWARD CLUTCH, 3-4 CLUTCH HYDRAULIC CIRCUIT OUTLINE [FN4A-EL] 05–17–20
TRANSAXLE RANGE (TR) SWITCH FUNCTION [FN4A-EL] 05–17–20
TRANSAXLE RANGE (TR) SWITCH CONSTRUCTION/OPERATION [FN4A-EL] 05–17–20
VEHICLE SPEED SENSOR (VSS) FUNCTION [FN4A-EL] 05–17–21
VEHICLE SPEED SENSOR (VSS) CONSTRUCTION/ OPERATION [FN4A-EL] 05–17–21
INPUT/TURBINE SPEED SENSOR FUNCTION [FN4A-EL] 05–17–22
INPUT/TURBINE SPEED SENSOR CONSTRUCTION/OPERATION [FN4A-EL] 05–17–22
TRANSAXLE FLUID TEMPERATURE (TFT) SENSOR FUNCTION [FN4A-EL] 05–17–22
TRANSAXLE FLUID TEMPERATURE (TFT) SENSOR CONSTRUCTION/OPERATION [FN4A-EL] 05–17–23
ELECTRONIC CONTROL SYSTEM OUTLINE [FN4A-EL] 05–17–23
ELECTRONIC CONTROL SYSTEM CONSTRUCTION [FN4A-EL] 05–17–24
ELECTRONIC CONTROL SYSTEM BLOCK DIAGRAM [FN4A-EL] 05–17–25
ELECTRONIC CONTROL ITEMS AND CONTENTS [FN4A-EL] 05–17–25
COMPONENT DESCRIPTIONS (ELECTRONIC CONTROL) [FN4A-EL] 05–17–26
INPUT/OUTPUT SIGNAL AND RELATED CONTROLS [FN4A-EL] 05–17–26
LINE PRESSURE CONTROL OUTLINE [FN4A-EL]. 05–17–27
PRESSURE CONTROL SOLENOID (LINEAR TYPE) OUTLINE [FN4A-EL] 05–17–29
PRESSURE CONTROL SOLENOID (LINEAR TYPE) OPERATION [FN4A-EL]. 05–17–30
SHIFT CONTROL STRUCTURE [FN4A-EL]. 05–17–30
SHIFT SOLENOID A, B AND C (DUTY-CYCLE TYPE) OUTLINE [FN4A-EL] 05–17–31
SHIFT SOLENOID A, B AND C (DUTY-CYCLE TYPE) FUNCTION [FN4A-EL] 05–17–31
SHIFT SOLENOID A, B AND C (DUTY-CYCLE TYPE) OPERATION [FN4A-EL]. 05–17–31
SHIFT SOLENOID D AND E (ON/OFF TYPE) OUTLINE [FN4A-EL] 05–17–32
SHIFT SOLENOID D AND E (ON/OFF TYPE) FUNCTION [FN4A-EL]. 05–17–32
SHIFT SOLENOID D AND E (ON/OFF TYPE) OPERATION [FN4A-EL]. 05–17–33
DRIVING MODE DETERMINATION OPERATION [FN4A-EL]. 05–17–33
DIRECT ELECTRIC SHIFT CONTROL OUTLINE [FN4A-EL]. 05–17–33
DIRECT ELECTRIC SHIFT CONTROL OPERATION [FN4A-EL]. 05–17–34
MANUAL MODE SHIFT CONTROL STRUCTURE [FN4A-EL]. 05–17–35
MANUAL MODE SHIFT CONTROL OPERATION [FN4A-EL]. 05–17–36
AT WARNING LIGHT FUNCTION [FN4A-EL]. 05–17–37
AT WARNING LIGHT CONSTRUCTION/OPERATION [FN4A-EL]. 05–17–38
SELECTOR INDICATOR LIGHT FUNCTION [FN4A-EL]. 05–17–38
SELECTOR INDICATOR LIGHT CONSTRUCTION/ OPERATION [FN4A-EL]. 05–17–38
FEEDBACK CONTROL STRUCTURE [FN4A-EL]. 05–17–39
FEEDBACK CONTROL OPERATION [FN4A-EL]. 05–17–39
ENGINE-TRANSAXLE TOTAL CONTROL STRUCTURE [FN4A-EL] 05–17–40
ENGINE-TRANSAXLE TOTAL CONTROL OPERATION [FN4A-EL]. 05–17–40
TORQUE CONVERTER CLUTCH (TCC) CONTROL OUTLINE [FN4A-EL] 05–17–41
TORQUE CONVERTER CLUTCH (TCC) OPERATION [FN4A-EL]. 05–17–41
SLOPE MODE CONTROL OUTLINE [FN4A-EL]. 05–17–44
SLOPE MODE CONTROL OPERATION [FN4A-EL]. 05–17–44
COOLING SYSTEM OUTLINE [FN4A-EL]. 05–17–44

AUTOMATIC TRANSAXLE OUTLINE [FN4A-EL]

DPE051700000T01

- A manual mode shift control has been adopted.
  - — The manual mode shift control is activated by moving the selector lever from the D to M range position.
  - — The automatic shift system automatically shifts between 1GR and 4GR. The manual shift system allows for free gear position selection by manually operating the selector lever forward and back.

AUTOMATIC TRANSAXLE CROSS-SECTIONAL VIEW [FN4A-EL]

DPE051700000T02

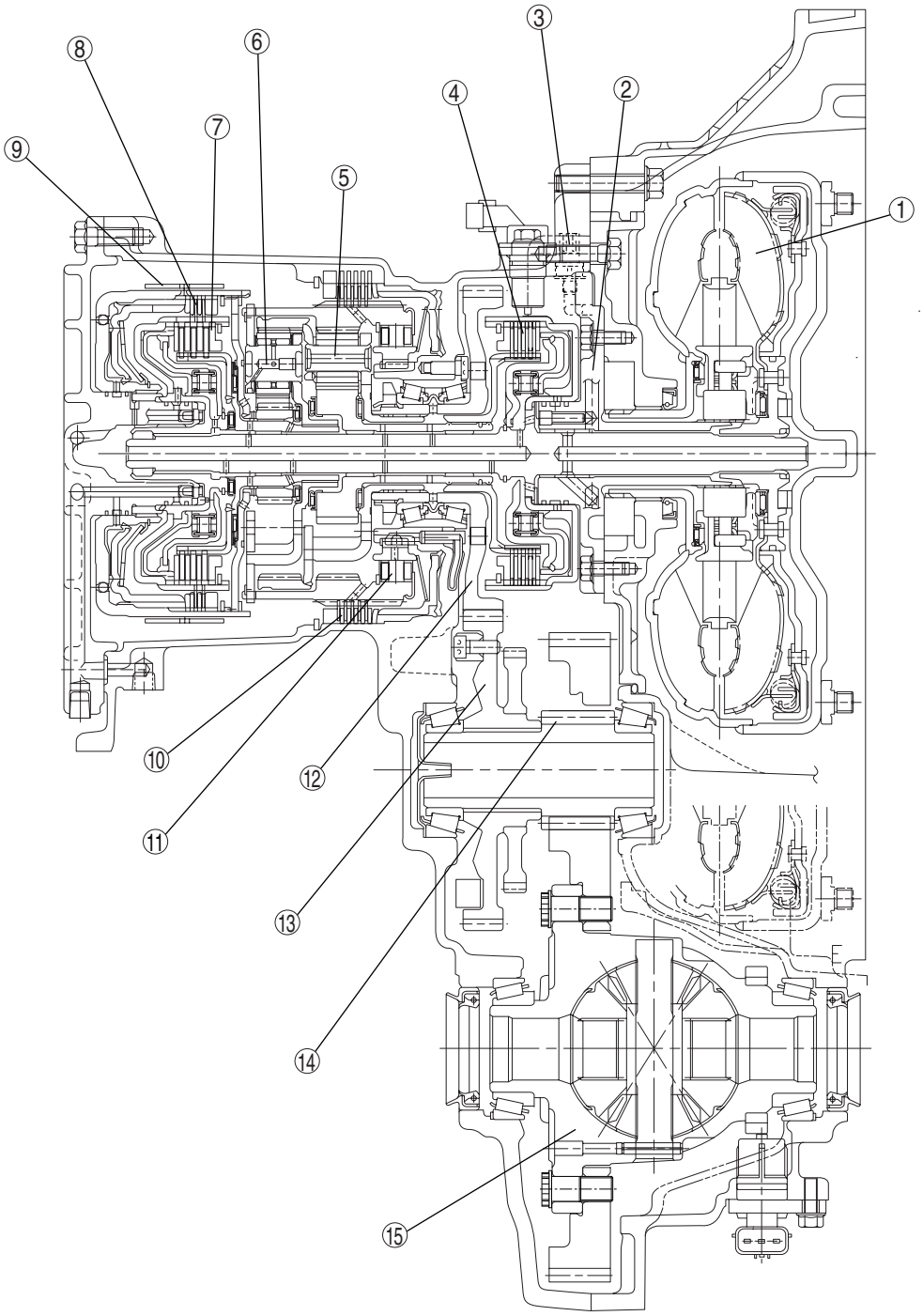

DPE517ZT1001

1	Torque converter
2	Oil pump

3	Oil pressure switch
4	Forward clutch

5	Front planetary gear
6	Rear planetary gear
7	3-4 clutch
8	Reverse clutch
9	2-4 brake band
10	Low and reverse brake
11	One-way clutch
12	Primary gear
13	Secondary gear
14	Output gear
15	Differential

OUTLINE OF OPERATION [FN4A-EL]

DPE051700000T03

- The operation of the electronic automatic transaxle is classified into three systems: the electronic control mechanism, the hydraulic pressure control mechanism, and the powertrain mechanism (includes the torque converter mechanism). The operation of each system is as follows:
  - — Electronic control mechanism
    - According to the signals from the switches and sensors in the input system, the PCM outputs the signal which matches the present driving condition to the linear type solenoid, ON/OFF type solenoids and the duty-cycle type solenoids in the hydraulic pressure control mechanism.
  - — Hydraulic pressure control mechanism
    - According to the signals from the PCM, each solenoid operates to switch the hydraulic passages in the control valve body and controls the clutch engagement pressure.
    - The line pressure is adjusted by the linear type pressure control solenoid. The hydraulic passages are switched by the ON/OFF type solenoids (shift solenoids D and E.) And the clutch engagement pressure is controlled by the duty-cycle type solenoids (shift solenoids A, B, and C).
  - — Powertrain mechanism
    - The driving force from the engine is transmitted through the torque converter to the transaxle.
    - The transmitted driving force operates each clutch and brake according to the clutch engagement pressure from the duty-cycle type solenoid, and the planetary gears change the gear ratio to the optimal driving force. The changed driving force is transmitted through the differential to the axle shaft and then the tires.

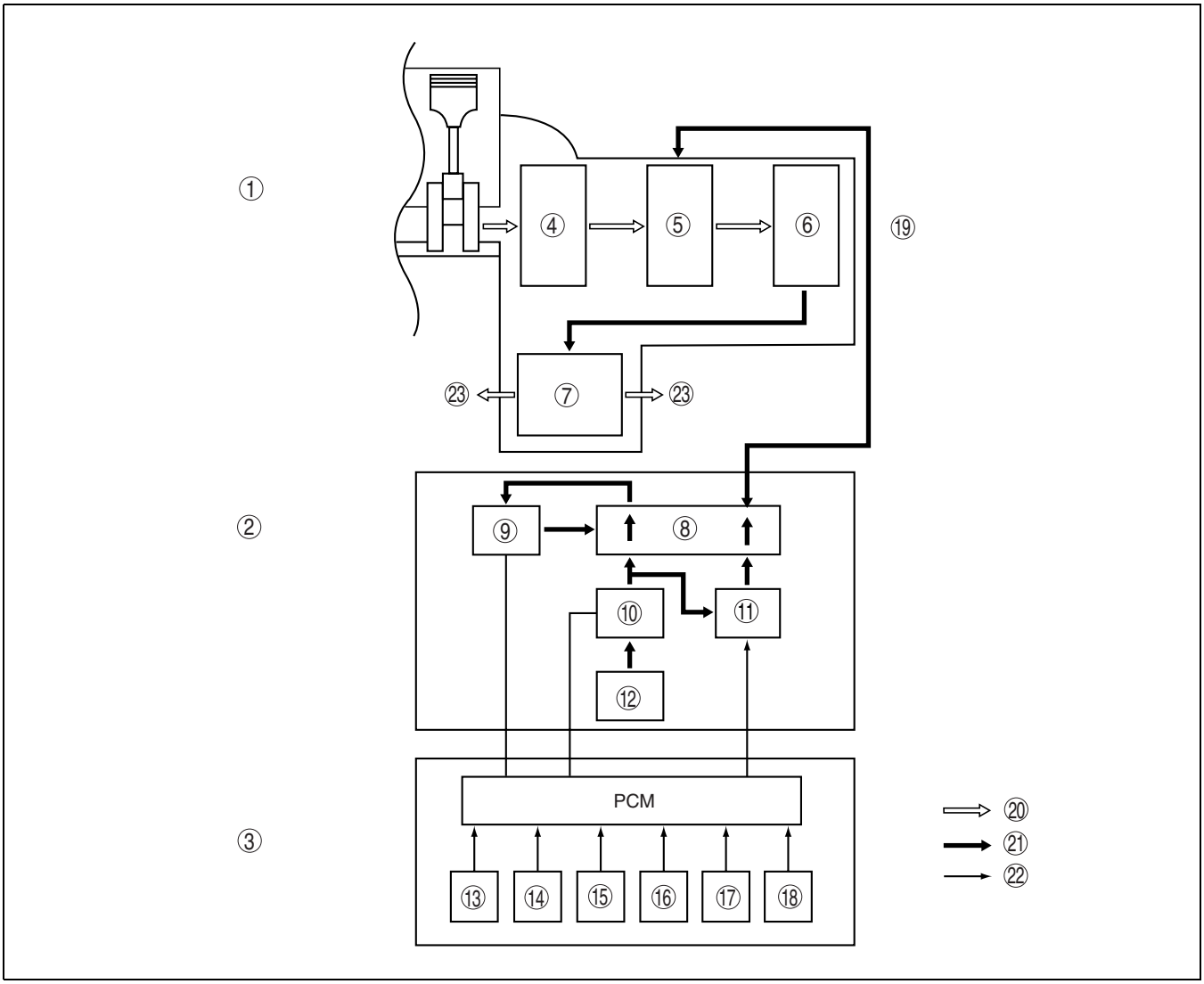

DPE517ZT1002

1	Powertrain mechanism
2	Hydraulic pressure control mechanism
3	Electronic control mechanism
4	Torque converter
5	Clutches, brakes
6	Planetary gear
7	Differential
8	Control valve body
9	Shift solenoid D, E (ON/OFF type)
10	Pressure control solenoid (linear type)
11	Shift solenoid A, B, C (duty-cycle type)
12	Oil pump

13	Oil pressure switch signal
14	Vehicle speed
15	ATF temperature
16	Forward clutch drum revolution speed
17	Engine revolution speed
18	Throttle position signal
19	Clutches, brakes engagement, release pressure
20	Power flow
21	Hydraulic pressure control signal
22	Electronic signal
23	Tire

EC-AT OPERATION CHART [FN4A-EL]

DPE051700000T04

Position/Range	Mode	Gear position		Shift pattern			Transaxle							Operation of shift solenoid				
										2–4 brake band				Solenoid valve (duty-cycle type)			Solenoid valve (ON / OFF type)	
				Shift	TCC	Engine brake	Forward clutch	3–4 clutch	Reverse clutch	Applied	Released	Low and reverse brake	One-way clutch	Shift solenoid A	Shift solenoid B	Shift solenoid C	Shift solenoid D	Shift solenoid E
P	–	Neutral	–	–										–	–	–	ON	OFF
R	–	Reverse	2.279	–		×			×			×		OPEN	OPEN	OPEN	OFF	OFF
N	–	Neutral	–	–										–	–	–	ON	OFF
D	*1 POWER/ NORMAL	1GR	2.816	↕			×						⊗	OPEN	CLOSE	CLOSE	OFF	OFF
		2GR	1.553	↕		×	×			×				OPEN	OPEN	CLOSE	OFF	OFF
		3GR	1.000	↕		×	×	×		× *3	×			OPEN	OPEN	OPEN	OFF	OFF
		4GR	0.695	↕		×		×		×				CLOSE	OPEN	OPEN	ON	OFF
		4GR *2 TCC ON	0.695	↕	×	×		×		×				CLOSE	OPEN	OPEN	ON	ON
M	MANUAL	1GR	2.816	↕ ↕		×	×					×	⊗	OPEN	OPEN	CLOSE	ON	ON
		2GR	1.553	↕ ↕		×	×			×				OPEN	OPEN	CLOSE	OFF	OFF
		3GR	1.000	↕ ↕		×	×	×		× *3	×			OPEN	OPEN	OPEN	OFF	OFF
		4GR	0.695	↕ ↕		×		×		×				CLOSE	OPEN	OPEN	ON	OFF

↕ : Automatic shift according to set speed and throttle opening angle
↕ : Manual shift based on selector lever operation
↕ : Consecutive shift by tapping selector lever two times in the down-shift (—) direction or up-shift (+) direction
*1 : Automatically switches between POWER and NORMAL modes according to accelerator pedal depressing speed
*2 : Performs TCC operation in NORMAL mode
*3 : Indicates operation although the band servo remains deactivated due to the large area of the release pressure side.
× : Operating
⊗ : Transmits the torque only when driving

OPEN: Engages the line pressure to the clutch pressure (Solenoid de-energized)
CLOSE: Drains the clutch pressure (Solenoid energized)
ON: Engages the output port and the supply port (Solenoid reducing pressure)
OFF: Engages the output port and the drain port (Drains the output port)

DPE517ZT1021

POWER FLOW OUTLINE [FN4A-EL]

DPE051700000T05

- In the powertrain mechanism, hydraulic pressure is transmitted from the control valves or shift solenoid A, B, or C (duty-cycle type) to operate the clutches and brakes, and the planetary gear changes the gear ratio according to the vehicle driving condition.

POWER FLOW STRUCTURE [FN4A-EL]

DPE051700000T06

- The powertrain mechanism of the FN4A-EL type consists of three pairs of clutches, brake, band brake, one-way clutch, and two pairs of single type planetary gears.

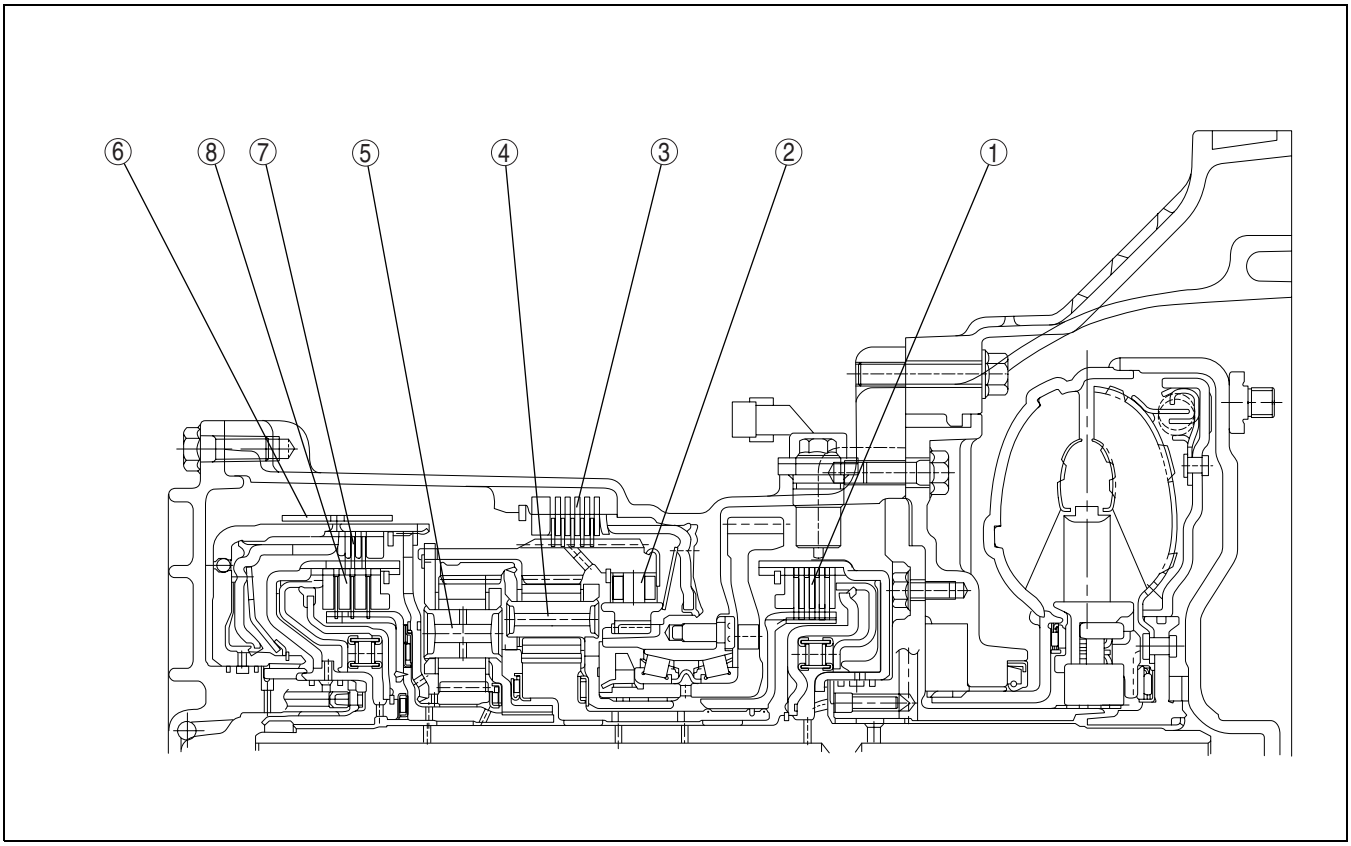

B3E0517T004

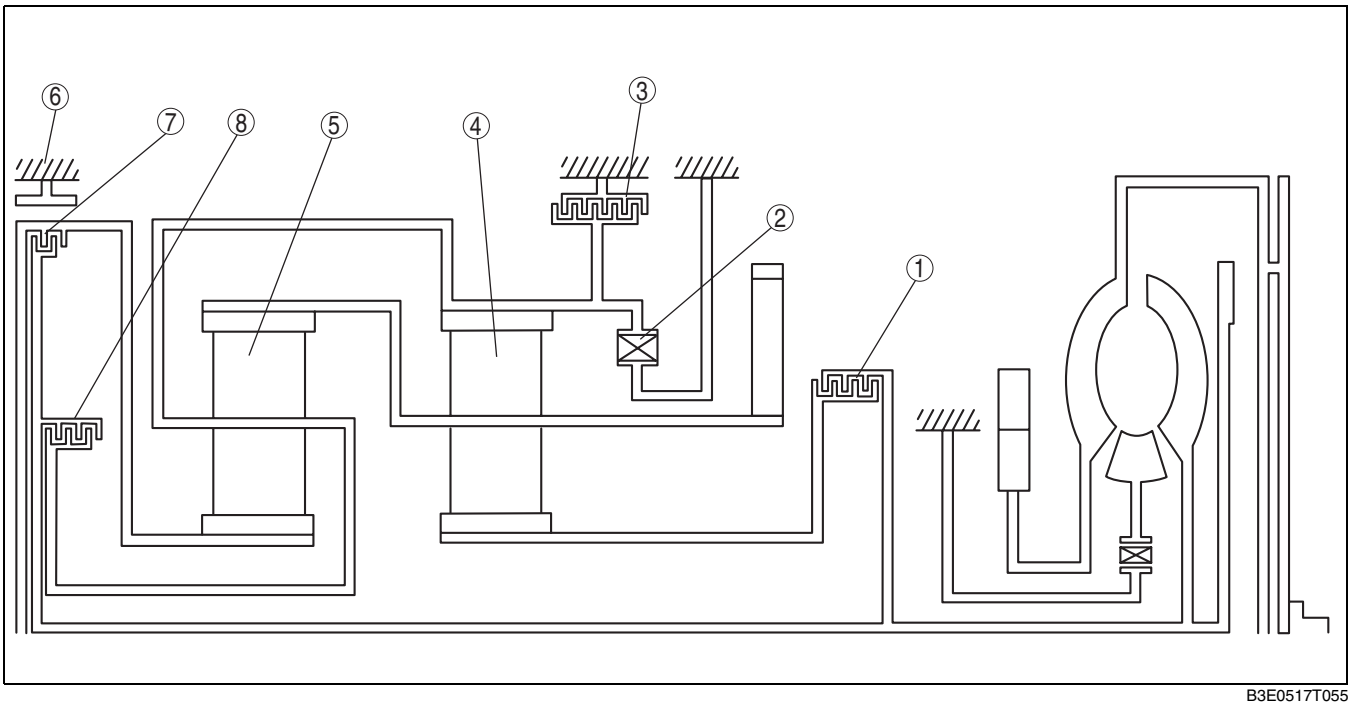

B3E0517T055

1	Forward clutch
2	One-way clutch
3	Low and reverse brake
4	Front planetary gear

5	Rear planetary gear
6	2-4 brake band
7	Reverse clutch
8	3-4 clutch

POWER FLOW OPERATION [FN4A-EL]

DPE051700000T07

Component description

Component	Function
Forward clutch	• Transmits the input torque from the turbine shaft to the front sun gear. • Operates in the forward range of the first, second, or third gear position.
3-4 clutch	• Transmits the input torque from the turbine shaft to the rear planetary carrier. • Operates in the forward range of the third or fourth gear position.
Reverse clutch	• Transmits the input torque from the turbine shaft to the rear sun gear. • Operates when the vehicle is backing up.
2-4 brake band	• Locks rotation of the reverse drum and fixes the rear sun gear. • Operates in the second or fourth gear position.
Low and reverse brake	• Fixes the rotation of the front internal gear. • Operates when the vehicle is backing up or in the first gear position (M range 1GR).
One-way clutch	• Locks the counterclockwise rotation of the front internal gear in the first gear position.
Planetary gear	• The planetary gear functions as a transmission due to the engagement/disengagement of clutches and/or brakes, converts the transmitted driving force of the turbine shaft and transmits it to the output gear.

Note

- All directions of rotation are viewed from the torque converter.

1GR (D range)

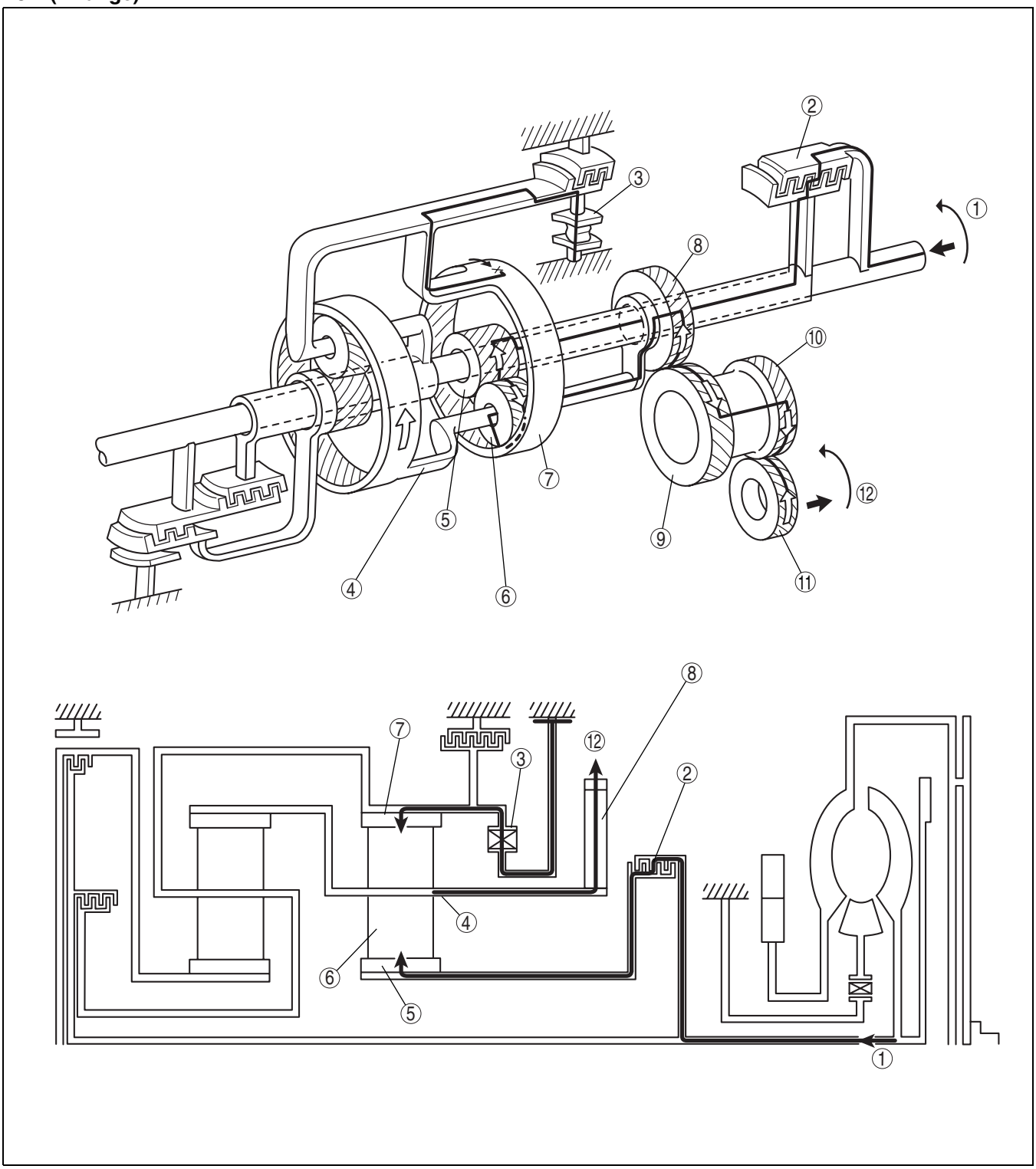

B3E0517T005

1	Input
2	Forward clutch
3	One-way clutch
4	Front planetary carrier
5	Front sun gear
6	Front pinion gear

7	Front internal gear
8	Primary gear
9	Secondary gear
10	Output gear
11	Ring gear (Differential)
12	Output

1GR (M range)

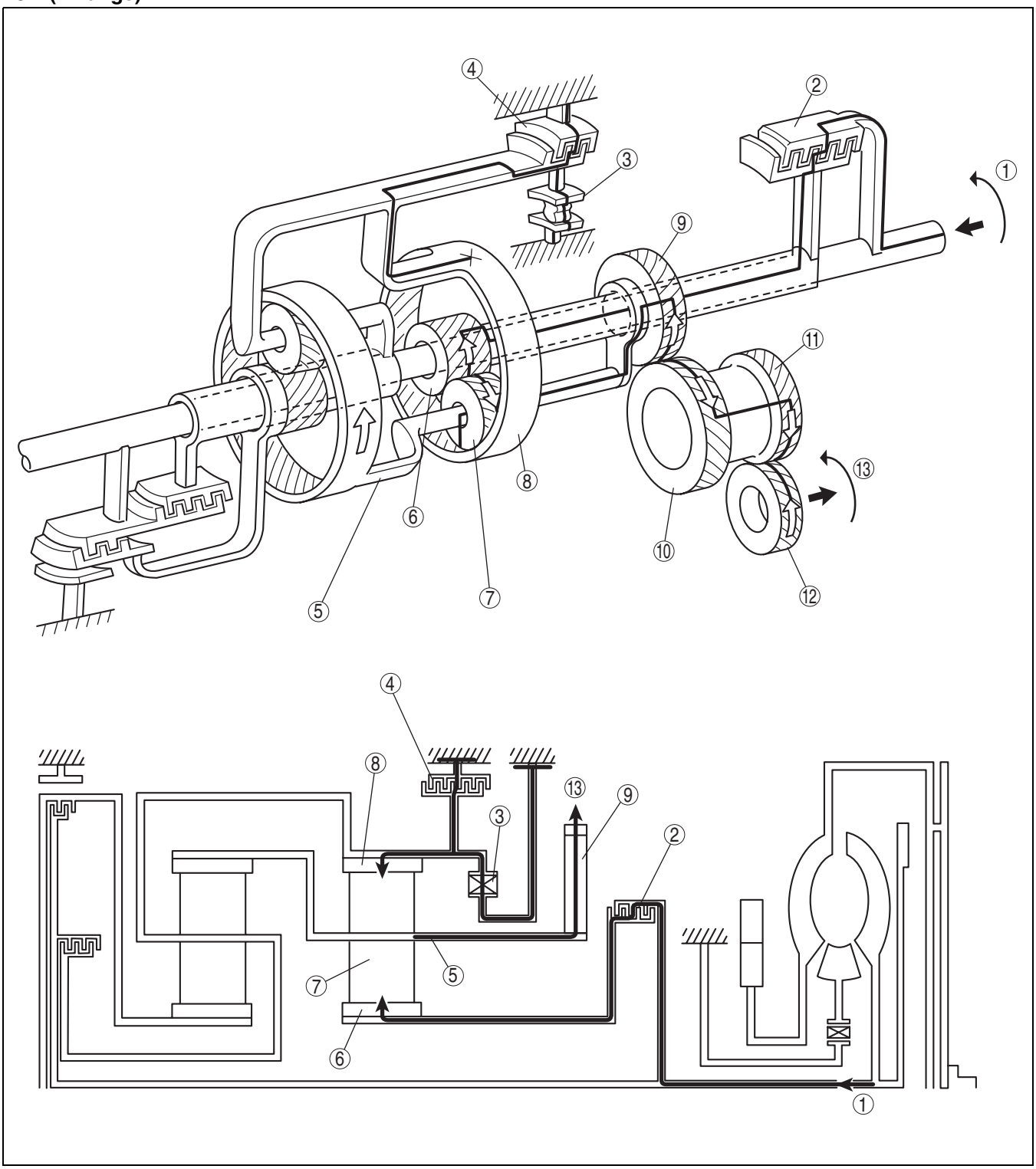

B3E0517T006

1	Input
2	Forward clutch
3	One-way clutch
4	Low and reverse brake
5	Front planetary carrier
6	Front sun gear
7	Front pinion gear

8	Front internal gear
9	Primary gear
10	Secondary gear
11	Output gear
12	Ring gear (Differential)
13	Output

2GR

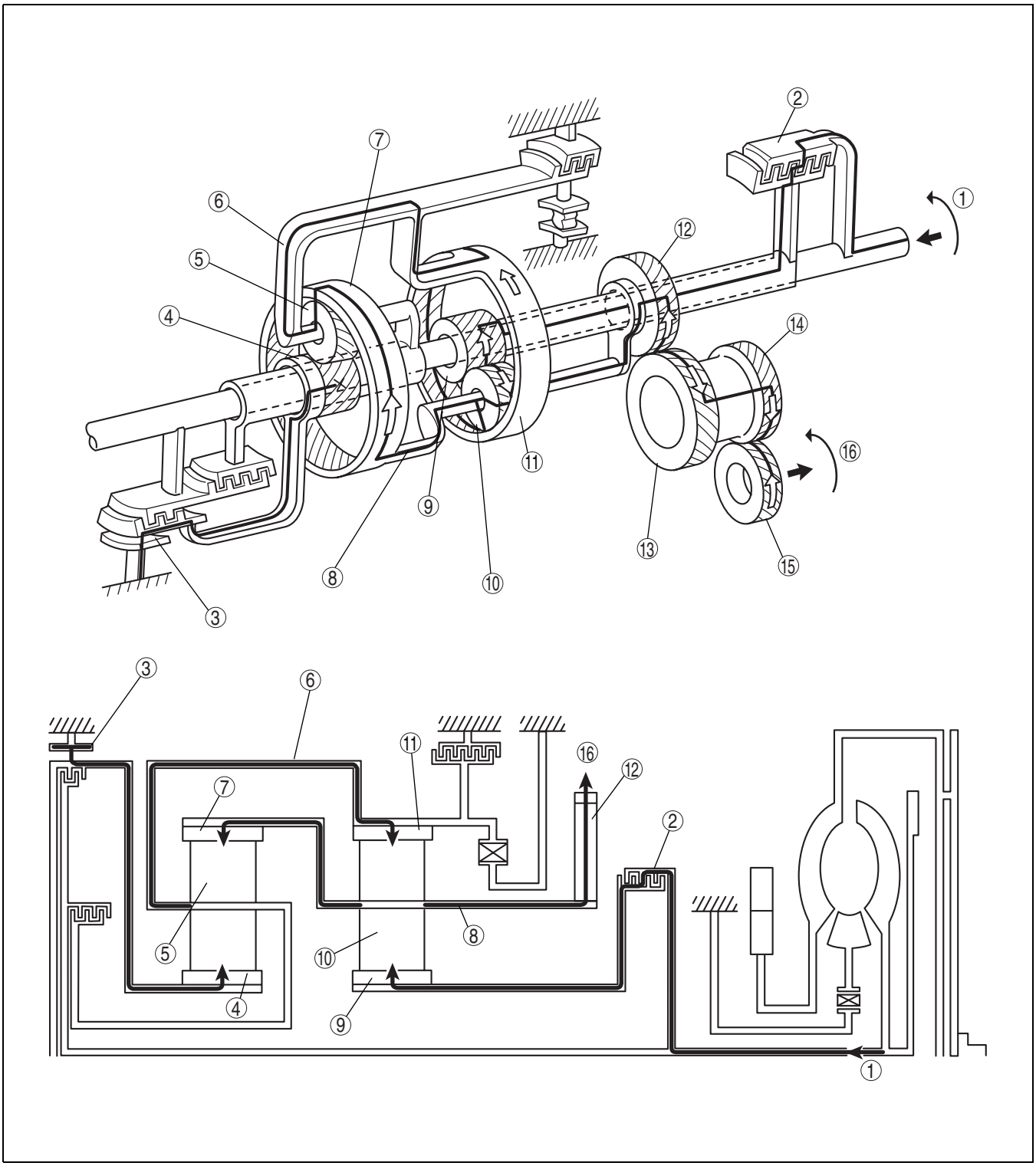

B3E0517T007

1	Input
2	Forward clutch
3	2-4 brake band
4	Rear sun gear
5	Rear pinion gear
6	Rear planetary carrier
7	Rear internal gear
8	Front planetary carrier

9	Front sun gear
10	Front pinion gear
11	Front internal gear
12	Primary gear
13	Secondary gear
14	Output gear
15	Ring gear (Differential)
16	Output

3GR

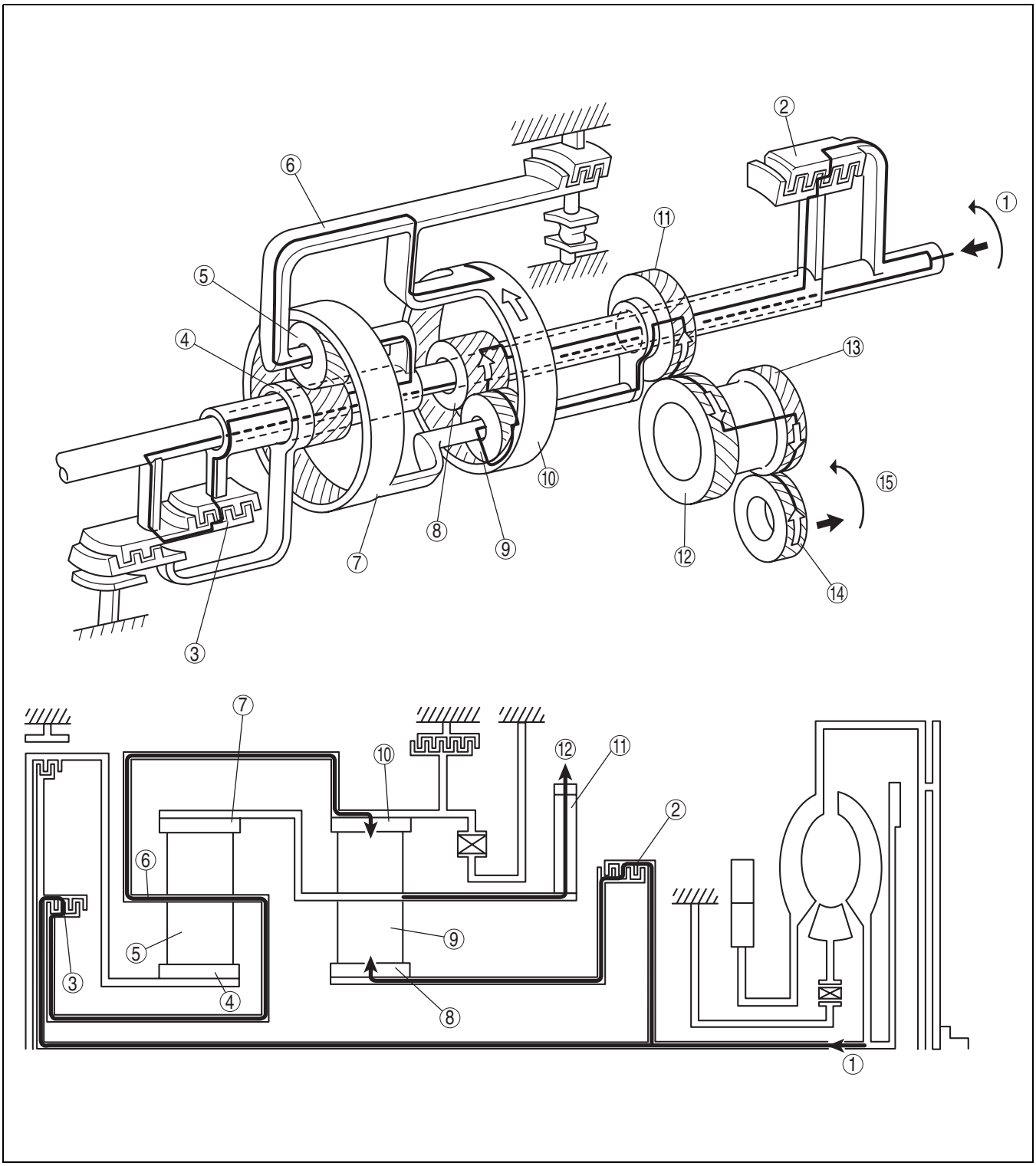

B3E0517T008

1	Input
2	Forward clutch
3	3-4 clutch
4	Rear sun gear
5	Rear pinion gear
6	Rear planetary carrier
7	Rear internal gear
8	Front sun gear

9	Front pinion gear
10	Front internal gear
11	Primary gear
12	Secondary gear
13	Output gear
14	Ring gear (Differential)
15	Output

4GR

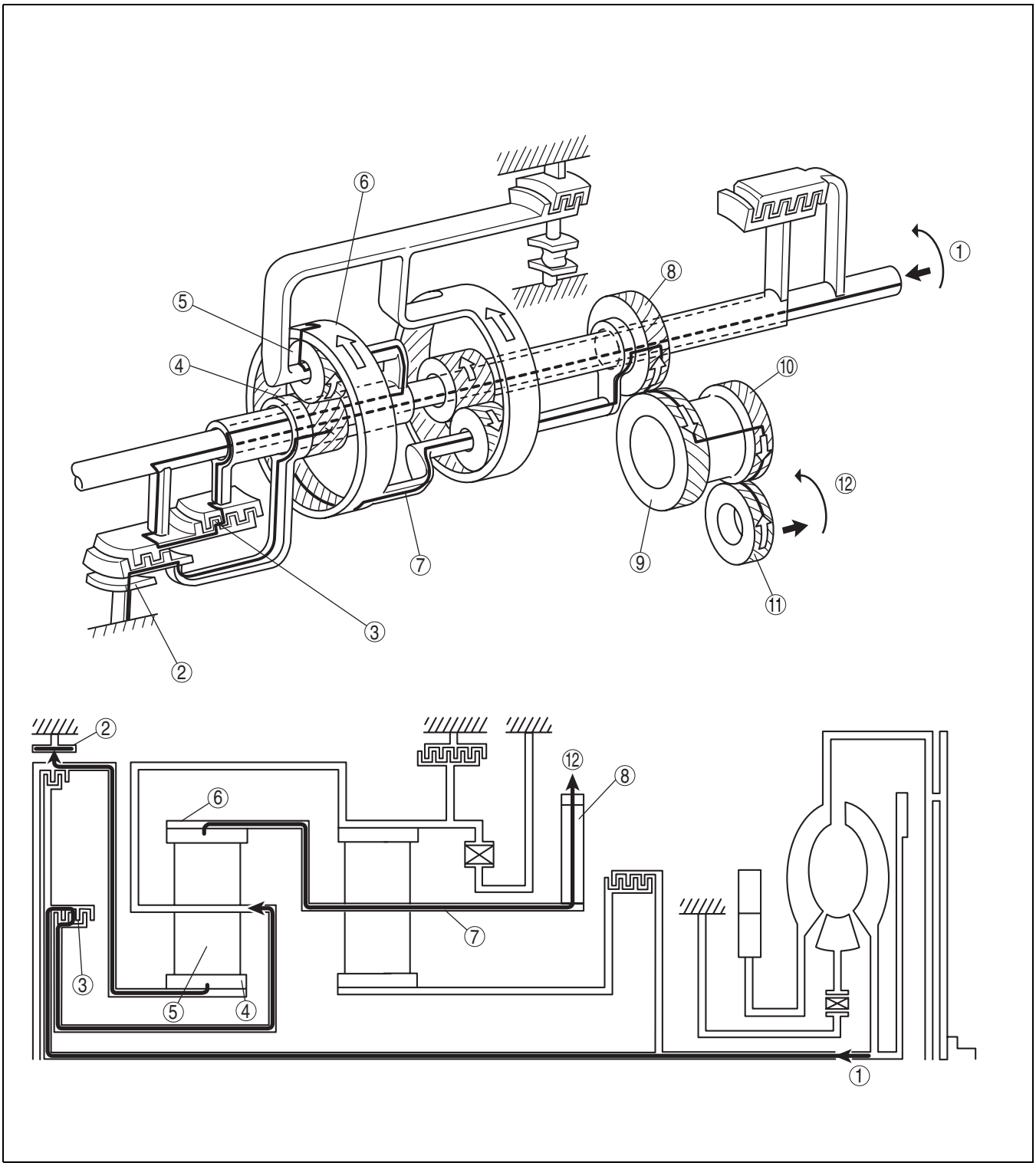

B3E0517T009

1	Input
2	2-4 brake band
3	3-4 clutch
4	Rear sun gear
5	Rear pinion gear
6	Rear internal gear

7	Front planetary carrier
8	Primary gear
9	Secondary gear
10	Output gear
11	Ring gear (Differential)
12	Output

R position

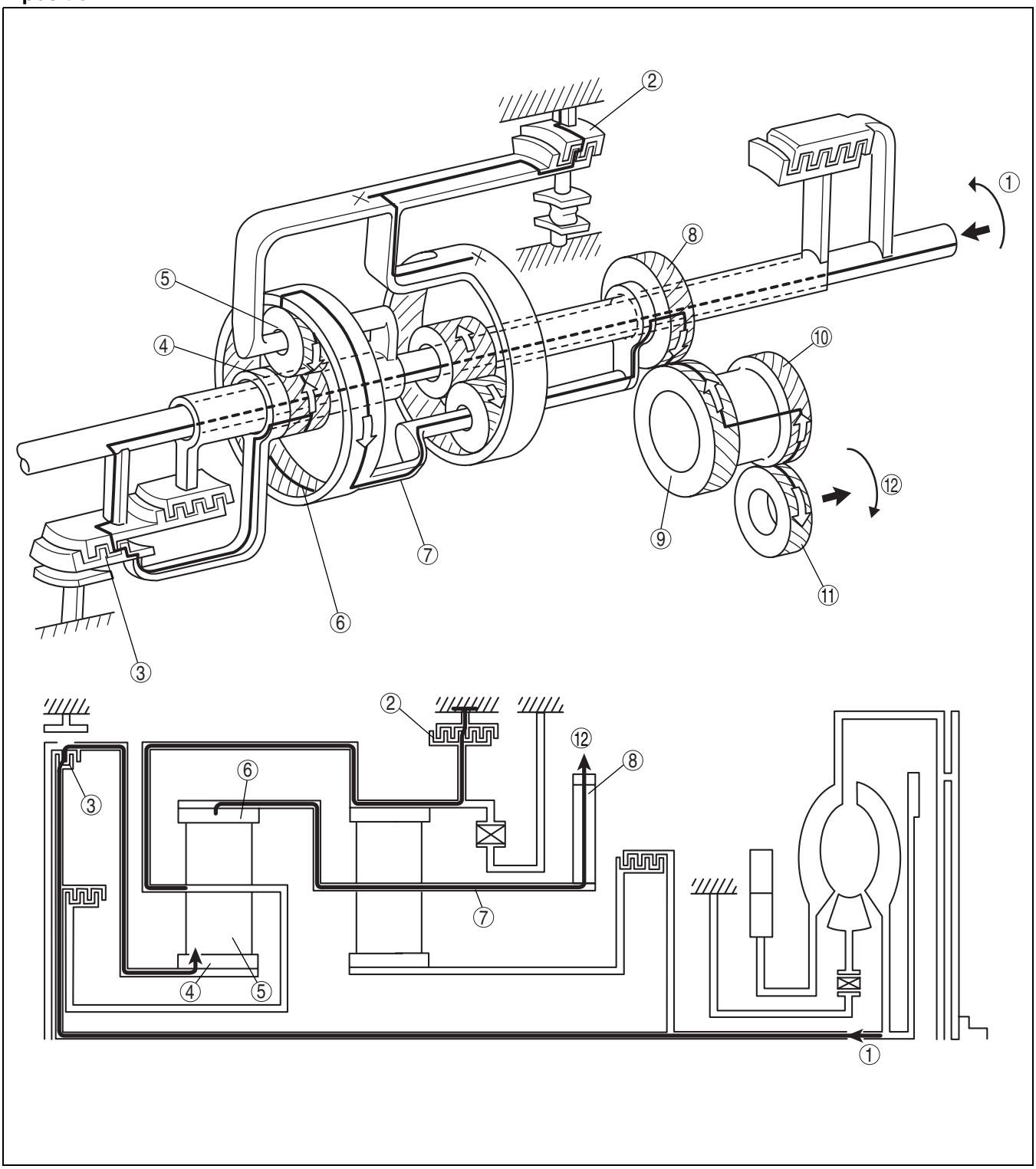

B3E0517T010

1	Input
2	Low and reverse brake
3	Reverse clutch
4	Rear sun gear
5	Rear pinion gear
6	Rear internal gear

7	Front planetary carrier
8	Primary gear
9	Secondary gear
10	Output gear
11	Ring gear (Differential)
12	Output

CENTRIFUGAL BALANCE CLUTCH OUTLINE [FN4A-EL]

DPE051719500T01

- A centrifugal balance clutch mechanism, which cancels the centrifugal oil pressure, has been adopted to improve clutch control.
- A bonded seal piston (press-worked component of a piston and a seal) has been adopted for each clutch and brake to reduce the piston size and weight.

CENTRIFUGAL BALANCE CLUTCH STRUCTURE [FN4A-EL]

DPE051719500T02

- The centrifugal balance clutch chambers are installed opposite the clutch chamber. The centrifugal balance clutch chambers are constantly filled with ATF from an exclusive hydraulic passage of the turbine shaft.

CENTRIFUGAL BALANCE CLUTCH OPERATION [FN4A-EL]

DPE051719500T03

When clutch pressure is not applied

- When the clutch drum rotates, centrifugal force acts on the residual ATF in the clutch chamber to push against the piston. However, centrifugal force also acts on the ATF filling the centrifugal balance clutch chamber to push back the piston. As a result, the two forces are cancelled out and the piston remains stationary, thus preventing clutch engagement.

When clutch pressure is applied

- When clutch pressure is applied to the clutch chamber, the clutch pressure overcomes the oil pressure and spring force in the opposite centrifugal balance clutch chamber, and pushes the piston to engage the clutches. Because the centrifugal force acting on the clutch pressure in the clutch chamber is canceled by another centrifugal force acting on the ATF filling the centrifugal balance clutch chamber, the influence of the centrifugal force created by the clutch drum revolution speed is eliminated. As a result, stable piston pushing force is obtained in all rotation ranges, and smoother shifts can be made.

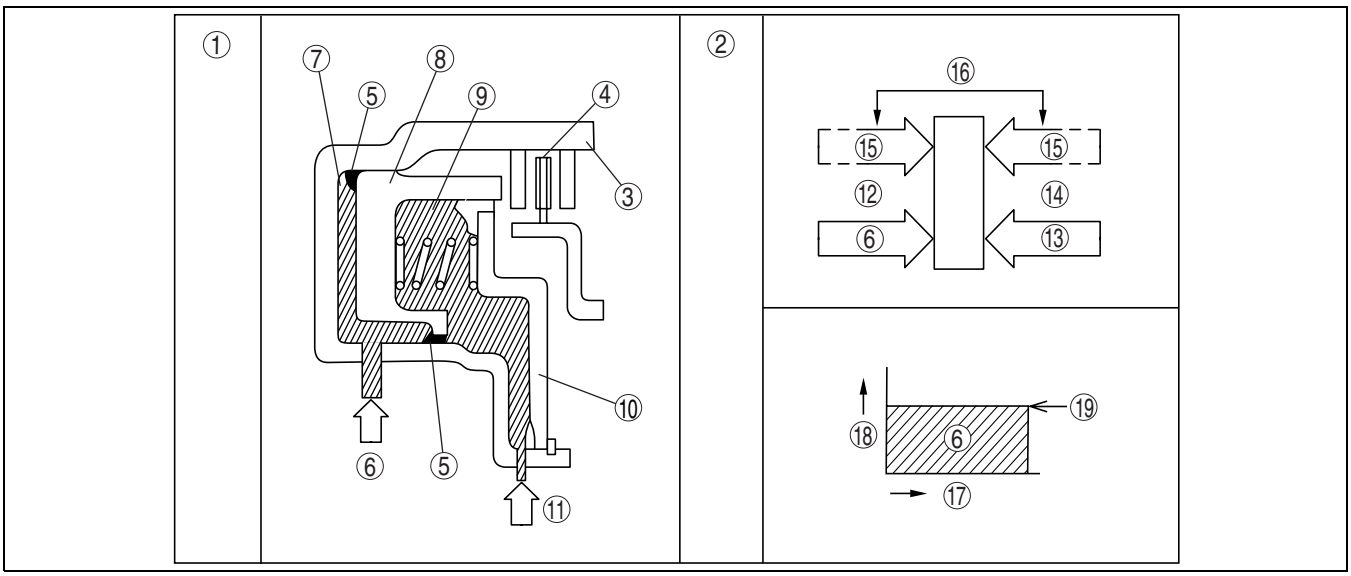

B3E0517T012

1	Structure
2	Operation
3	Clutch drum
4	Clutch
5	Seal
6	Clutch pressure
7	Clutch chamber
8	Bonded seal piston
9	Balance chamber
10	Seal plate

11	Lubrication passage
12	Centrifugal hydraulic pressure of piston chamber
13	Spring force
14	Centrifugal hydraulic pressure of balance chamber
15	Changes according to the rotation speed of clutch drum
16	Two forces cancel out
17	Drum revolution speed
18	Piston pushing force
19	Piston pushing force required to obtain shift quality

OUTPUT GEAR OUTLINE [FN4A-EL]

DPE051719204T01

- The two-step final drive mechanism has been adopted by arranging the secondary gear and the output gear on

the output gear shaft to miniaturize the transaxle.

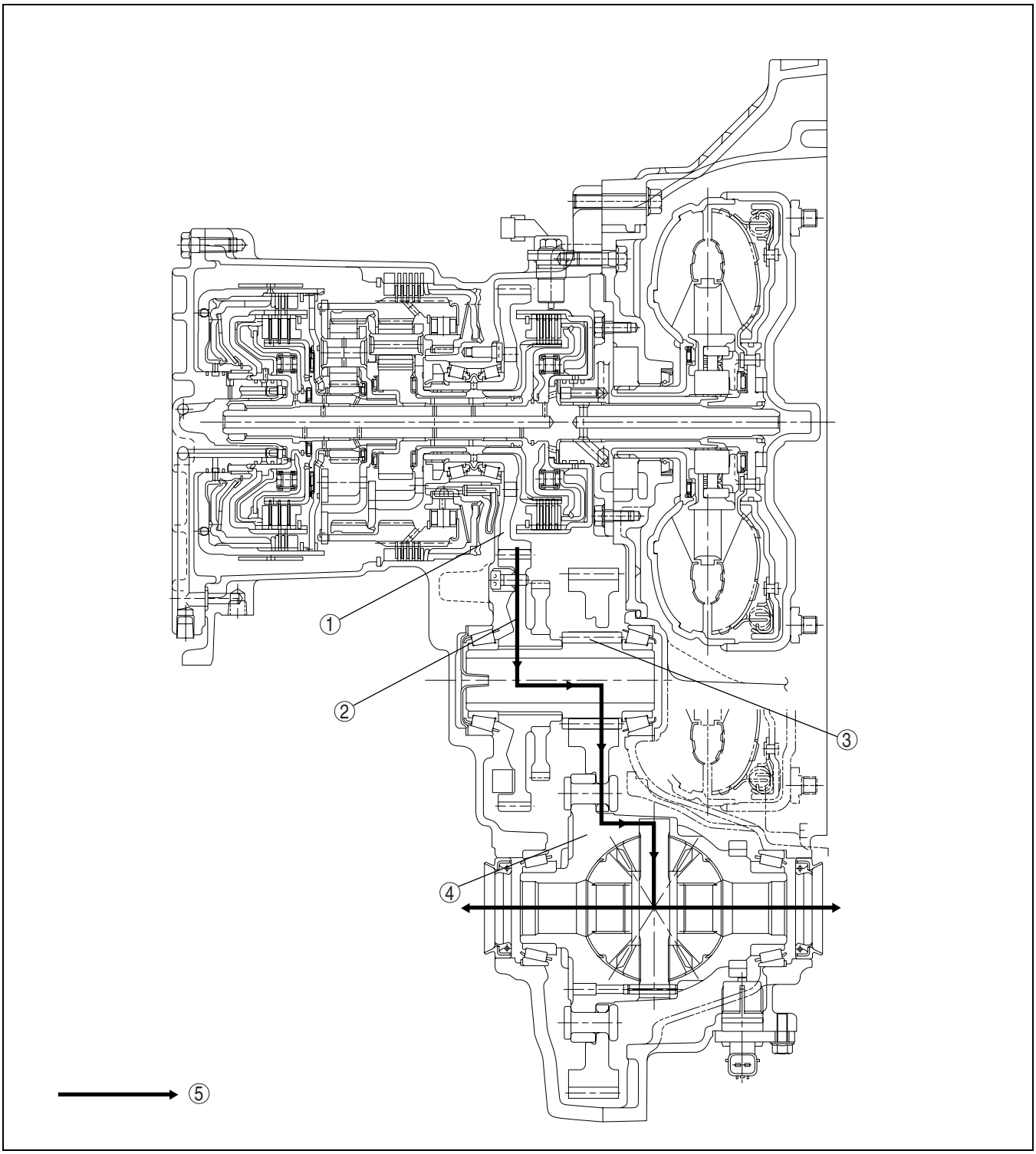

B3E0517T013

1	Primary gear
2	Secondary gear
3	Output gear

4	Differential
5	Power flow

TORQUE CONVERTER OUTLINE [FN4A-EL]

DPE051719100T01

- The torque converter clutch mechanism mechanically engages the pump impeller and the turbine runner under a specified condition, and transmits the power, not through the fluid, but directly, preventing the slip loss of the torque converter.
- The torque converter has obtained sufficient transaxle efficiency and torque converting ratio that matches the

output characteristic of each engine.

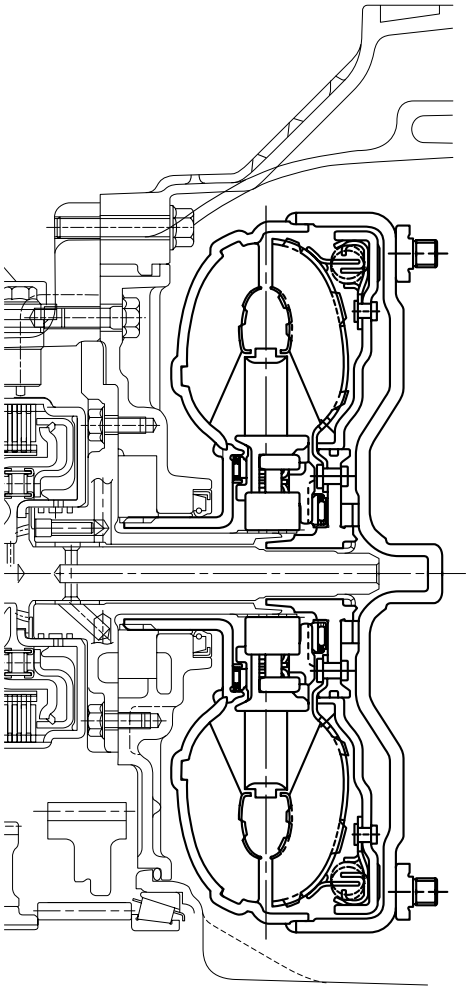

B3E0517A014

OIL PUMP OUTLINE [FN4A-EL]

DPE051719220T01

- The light-weight, compact, and quiet trochoid gear type oil pump has been adopted to reduce the pump driving torque.

- The direct drive type oil pump has been adopted and placed behind the torque converter.

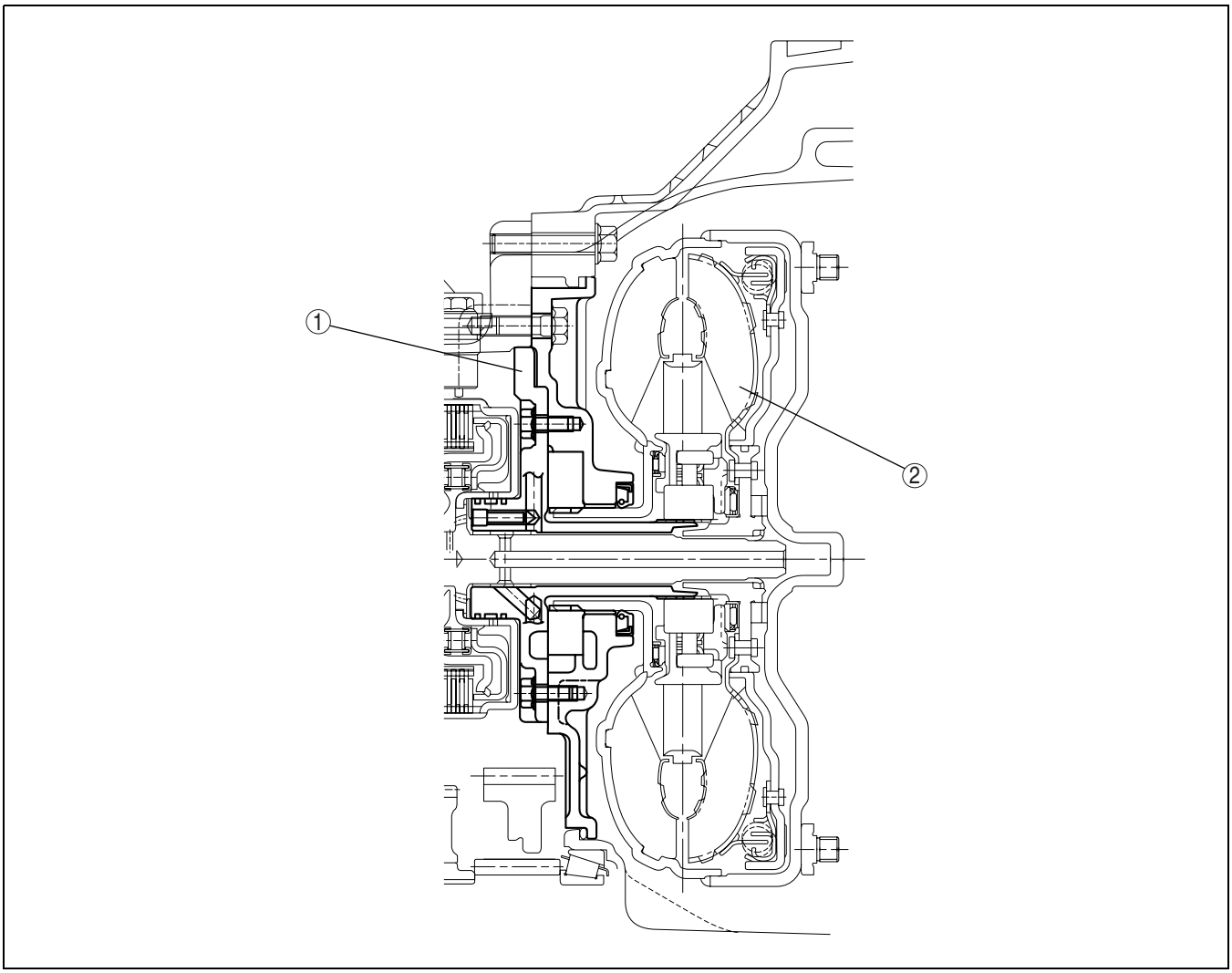

B3E0517T015

1	Oil pump

2	Torque converter

OIL PUMP STRUCTURE [FN4A-EL]

DPE051719220T02

- The outer rotor and the inner rotor are installed in the oil pump housing.
- The inner rotor in the oil pump housing is driven by the torque converter.

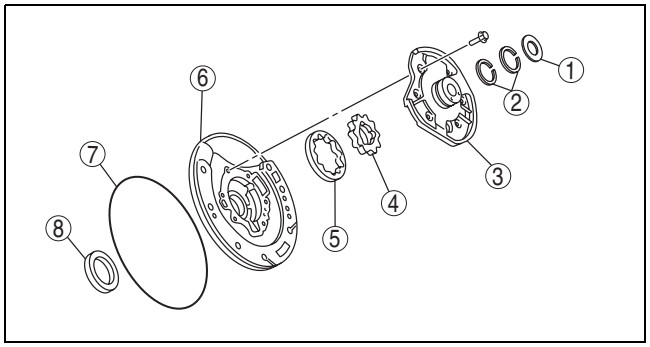

B3E0517T016

1	Thrust washer
2	Seal ring
3	Oil pump cover
4	Inner rotor
5	Outer rotor
6	Oil pump housing

7	O-ring
8	Oil seal

OIL PUMP OPERATION [FN4A-EL]

- When the inner rotor in the oil pump rotates, the ATF is drawn to the oil pump and then discharged from the oil pump. The discharge amount is proportional to the rotating speed of the torque converter. The ATF discharge amount is controlled by the pressure regulator valve and the pressure control solenoid.

DPE051719220T03

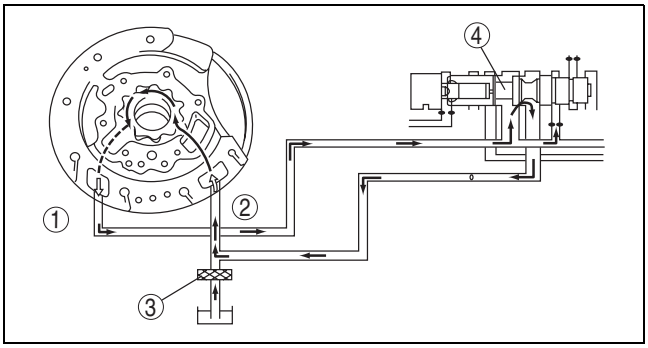

B3E0517T017

1	Out
2	In
3	Oil strainer
4	Pressure regulator valve

CONTROL VALVE BODY OUTLINE [FN4A-EL]

DPE051721100T01

- The control valve body is composed of three bodies: the upper control valve body, main control valve body, and the solenoid control valve body.
- Because the clutch engagement pressure is controlled electronically, the hydraulic circuits are simplified, the valve types are reduced, and the control valve body is miniaturized.

- The nonwoven fabric oil strainer is installed in the control valve body to prevent contamination.

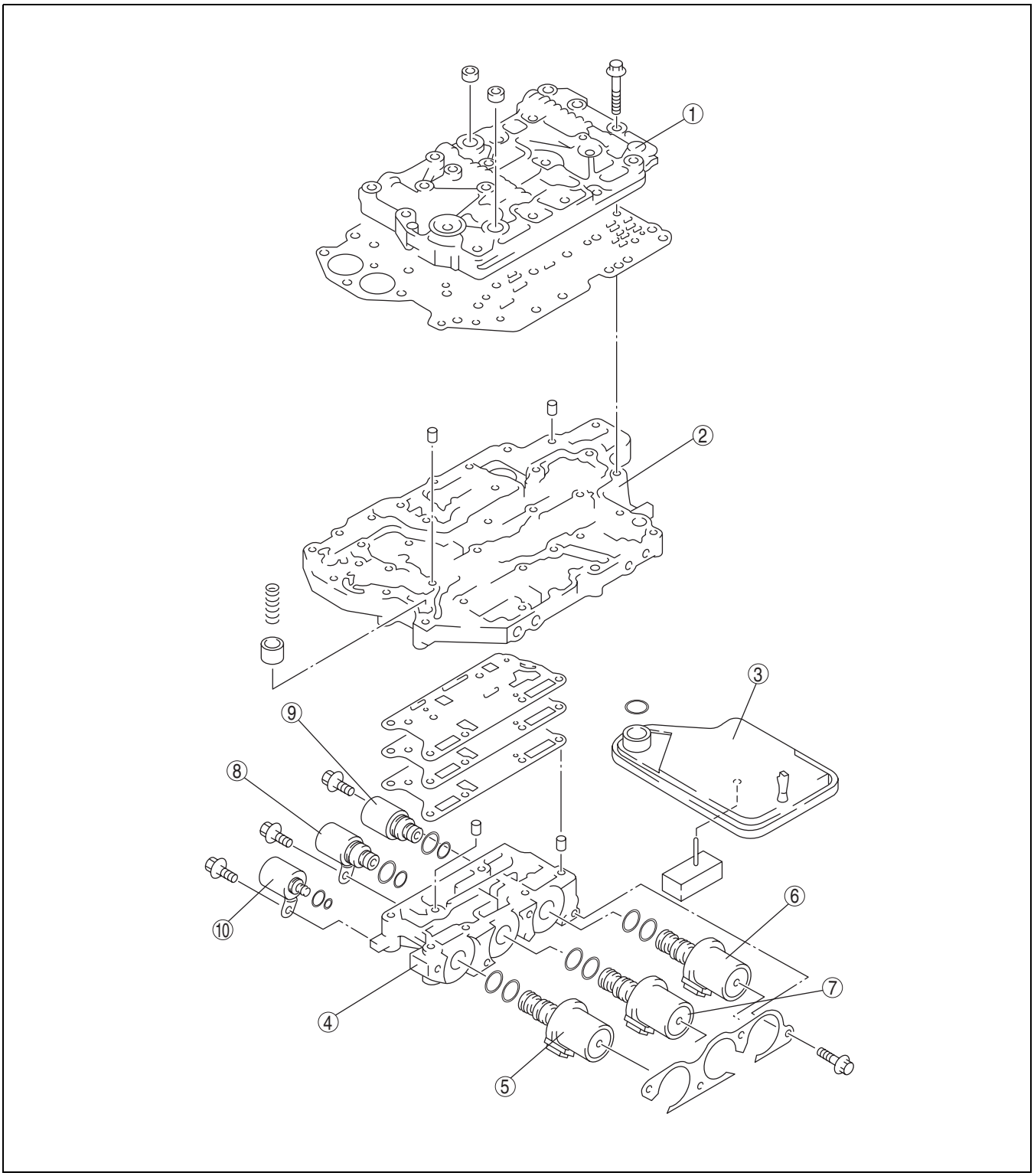

B3E0517T018

1	Upper control valve body
2	Main control valve body
3	Oil strainer
4	Solenoid valve body
5	Shift solenoid A

6	Shift solenoid B
7	Shift solenoid C
8	Shift solenoid D
9	Shift solenoid E
10	Pressure control solenoid

FORWARD CLUTCH, 3-4 CLUTCH HYDRAULIC CIRCUIT OUTLINE [FN4A-EL]

DPE051719500T04

- By designing exclusive passages for the forward clutch and the 3-4 clutch in the transaxle case, via the oil pump and end cover the hydraulic pressure passages are shortened and control during clutch engagement is improved.

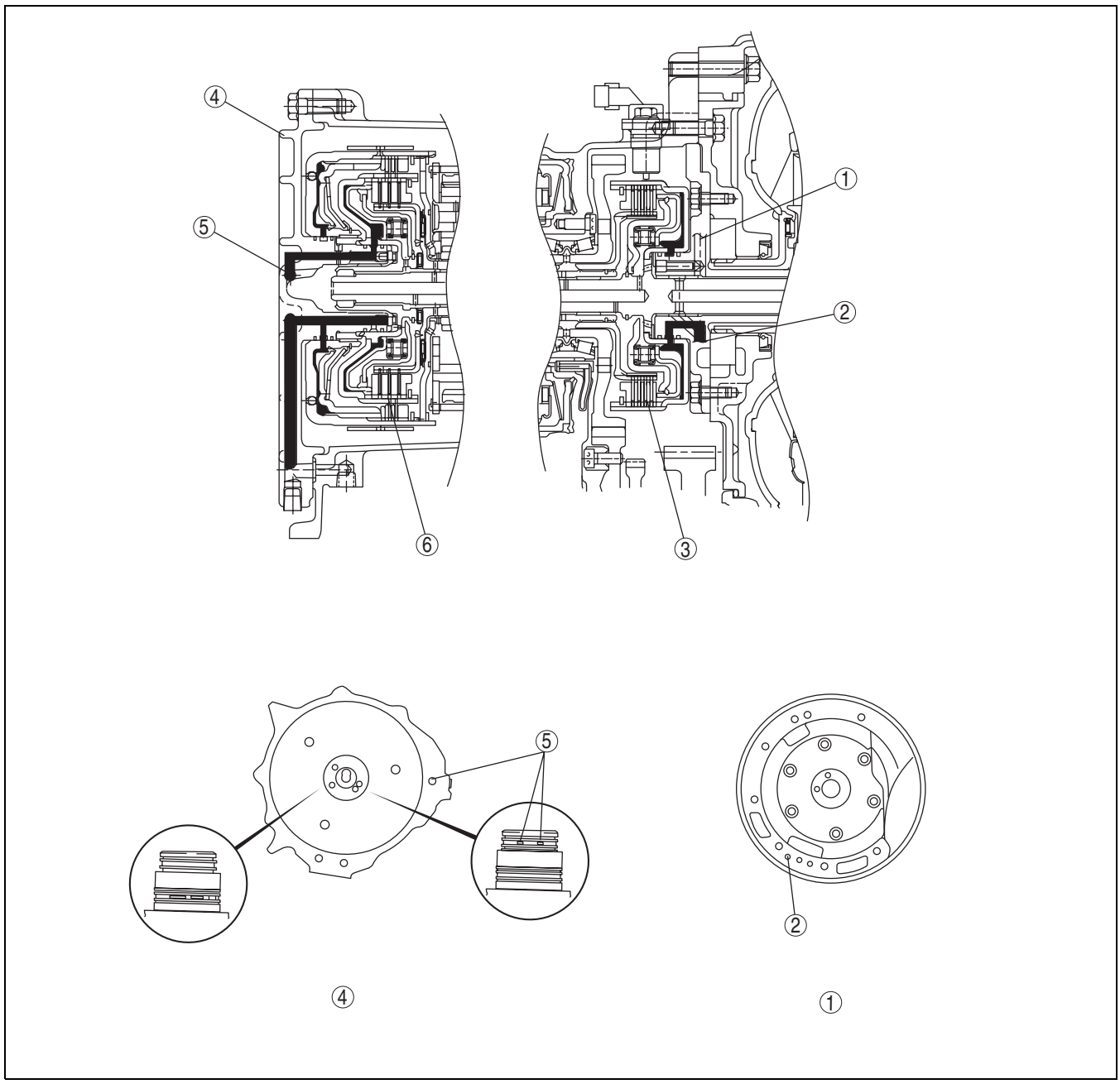

B3E0517T019

1	Oil pump
2	Forward clutch hydraulic passage
3	Forward clutch

4	End cover
5	3-4 clutch hydraulic passage
6	3-4 clutch

TRANSAXLE RANGE (TR) SWITCH FUNCTION [FN4A-EL]

DPE051719200T01

- The transaxle range switch detects the selector lever position and sends a signal to the PCM and the instrument cluster.

TRANSAXLE RANGE (TR) SWITCH CONSTRUCTION/OPERATION [FN4A-EL]

DPE051719200T02

- A variable resistor type switch has been adopted for the transaxle range switch.
- Because the transaxle range switch and the selector lever are connected by the selector cable, the transaxle range switch indicates a specified resistance according to selector lever operation and from this the PCM

determines the selector lever position. The corresponding signal are sent from the PCM to other related parts.

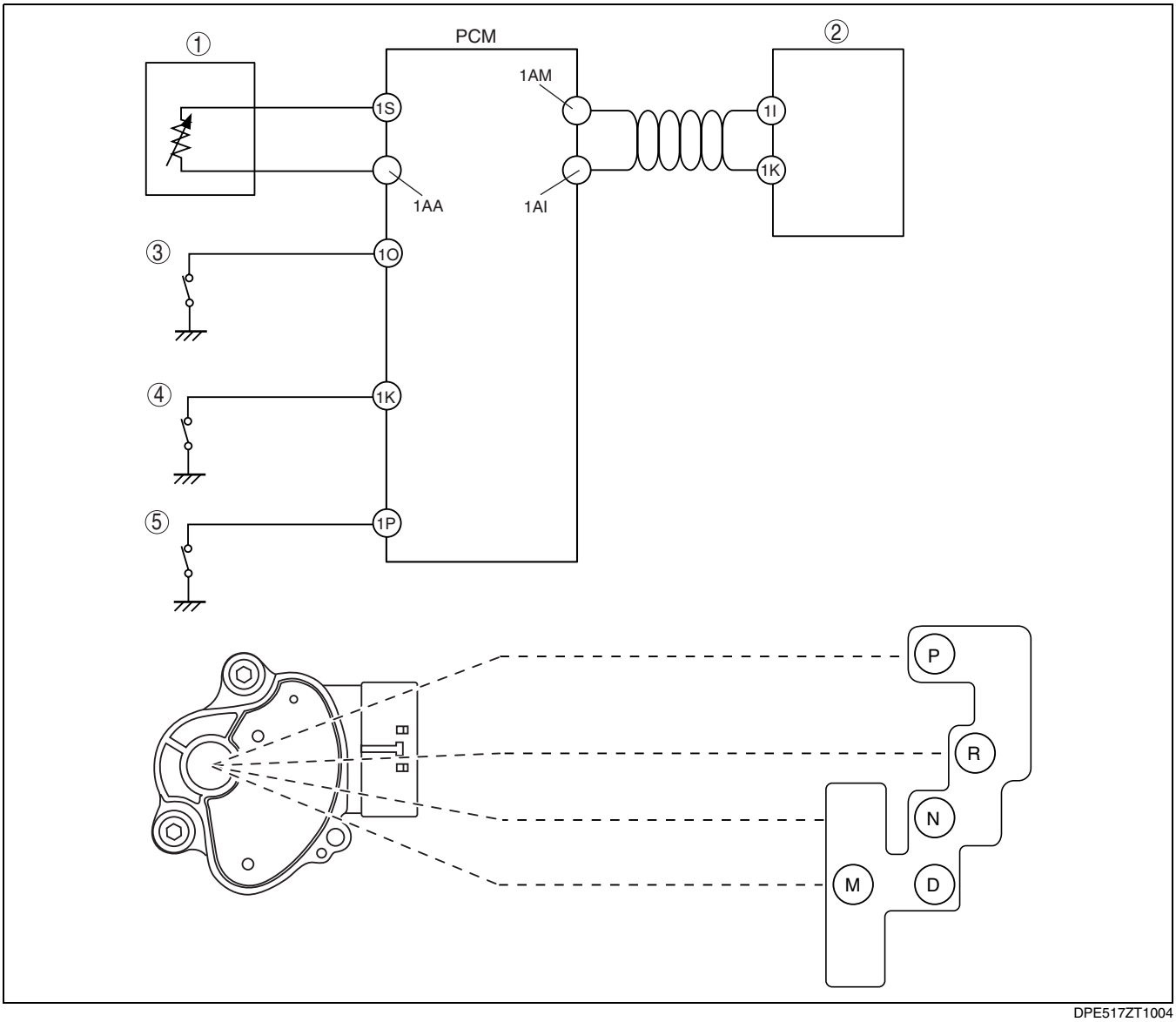

DPE517ZT1004

1	TR switch
2	Instrument cluster
3	M range switch

4	Up switch
5	Down switch

VEHICLE SPEED SENSOR (VSS) FUNCTION [FN4A-EL]

DPE051719200T03

- The VSS is located in the converter housing with clearance between it and the sensor rotor in the differential case, and detects the differential rotating speed.

VEHICLE SPEED SENSOR (VSS) CONSTRUCTION/OPERATION [FN4A-EL]

DPE051719200T04

- The VSS is a GMR element type. A 24-pulse signal is generated per rotation of the sensor rotor and the VSS sends this signal to the PCM.
- Consists of an IC in which a giant magneto resistive (GMR) element and signal processing circuit have been integrated, and a magnet. Signal reliability has been improved with the adoption of the GMR element resulting in the signal amplitude being wider compared to the hall element.
- Signal detection uses the special characteristics of GMR to change the electrical resistance corresponding to the magnetic field.
- The size (GMR output) of the magnetic field detected by the GMR element is changed into short waves as a sensor output signal at the signal processing circuit.
- The PCM performs EC-AT control based on the VSS and throttle position sensor signals.
- The PCM also outputs the vehicle speed signal to the instrument cluster.

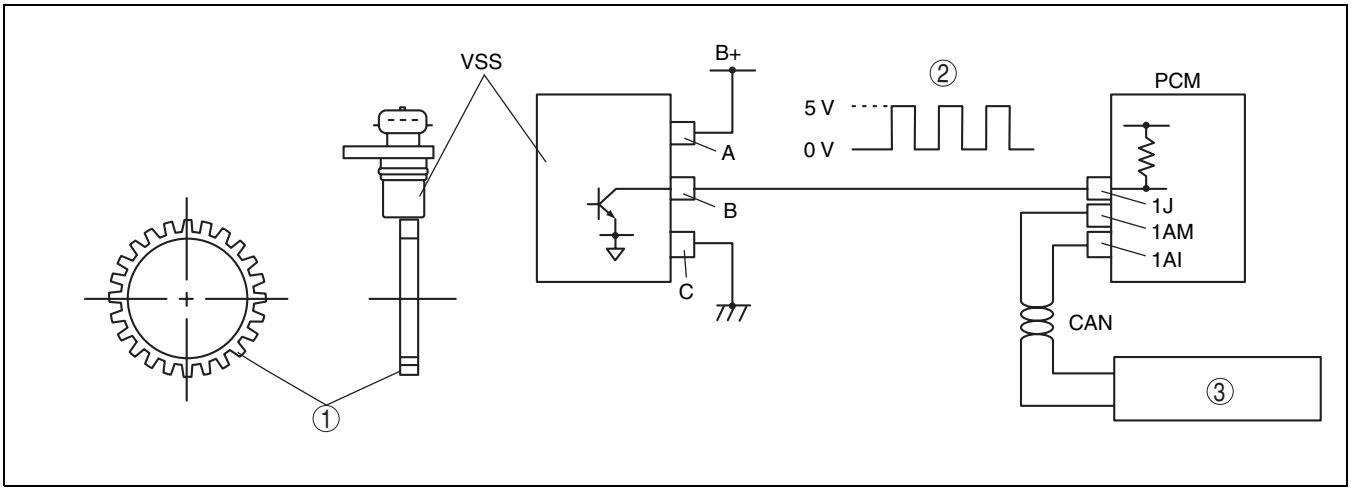

DPE517ZT1005

1	Sensor rotor
2	Input pulse

3	Instrument cluster

INPUT/TURBINE SPEED SENSOR FUNCTION [FN4A-EL]

DPE051719200T05

- The input/turbine speed sensor is located in the transaxle case with clearance between it and the forward clutch drum, and detects the rotating speed of the forward clutch drum (turbine).

INPUT/TURBINE SPEED SENSOR CONSTRUCTION/OPERATION [FN4A-EL]

DPE051719200T06

- The input/turbine speed sensor is a magnetic pickup type. A 32-pulse signal is generated per rotation of the forward clutch drum, and input to the PCM.
- The PCM detects the shift start and end timing according to the signal from the input/turbine speed sensor, and performs detailed control, improving shift quality.

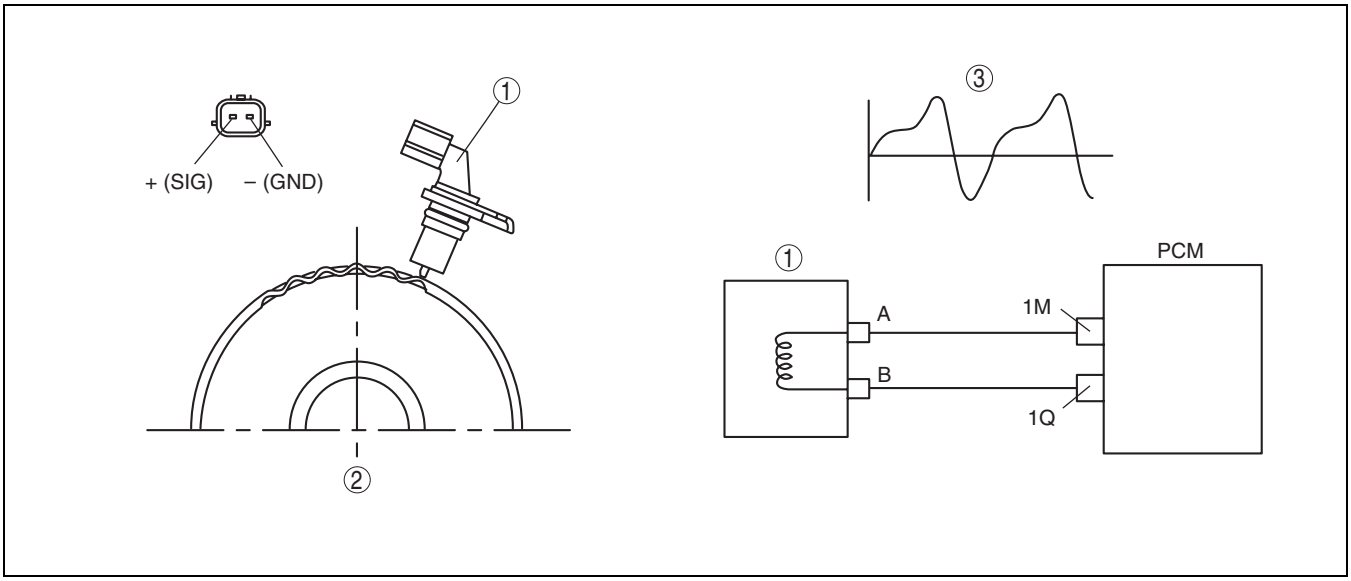

DPE517ZT1006

1	Input/turbine speed sensor
2	Forward clutch drum

3	Input wave form

TRANSAXLE FLUID TEMPERATURE (TFT) SENSOR FUNCTION [FN4A-EL]

DPE051719200T07

- The TFT sensor, which is installed in the oil strainer, detects the ATF temperature in the oil pan, and sends the control signal to the PCM. The PCM controls the driving pattern selection and the TCC based on the signal from the TFT sensor.

TRANSAXLE FLUID TEMPERATURE (TFT) SENSOR CONSTRUCTION/OPERATION [FN4A-EL]

DPE051719200T08

- The TFT sensor is a thermistor type and the resistance changes according to the ATF temperature.
- The characteristic of the resistance is as shown in the figure below: when the ATF temperature increases, the resistance decreases, and when the ATF temperature decreases, the resistance increases.

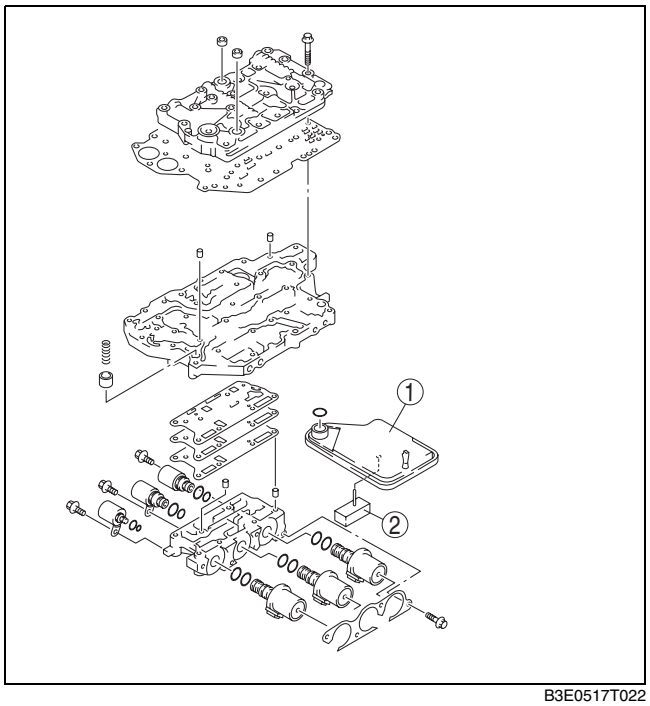

B3E0517T022

1	Oil strainer
2	TFT sensor

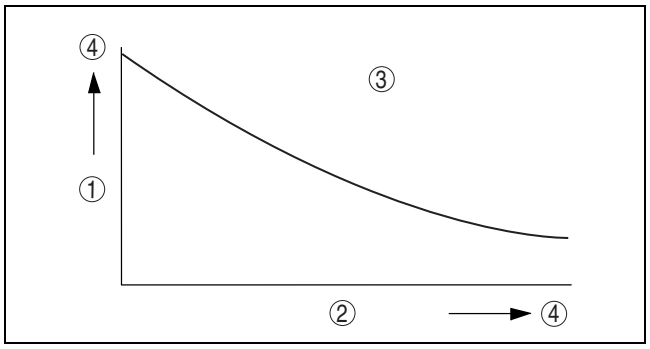

B3E0517T023

1	Resistance
2	ATF temperature
3	Characteristic of TFT sensor
4	Increases

ELECTRONIC CONTROL SYSTEM OUTLINE [FN4A-EL]

DPE051718880T01

- A PCM that is integrated with the PCM for engine control has been adopted for transaxle control. The PCM outputs the control signal to the engine and the transaxle according to the signal from each sensor and/or switch.
- Due to the adoption of the line pressure adjusting control by the linear type pressure control solenoid and the clutch engaging pressure control by duty-cycle type shift solenoids A, B, and C, excellent shift quality is obtained.

ELECTRONIC CONTROL SYSTEM CONSTRUCTION [FN4A-EL]

DPE051718880T02

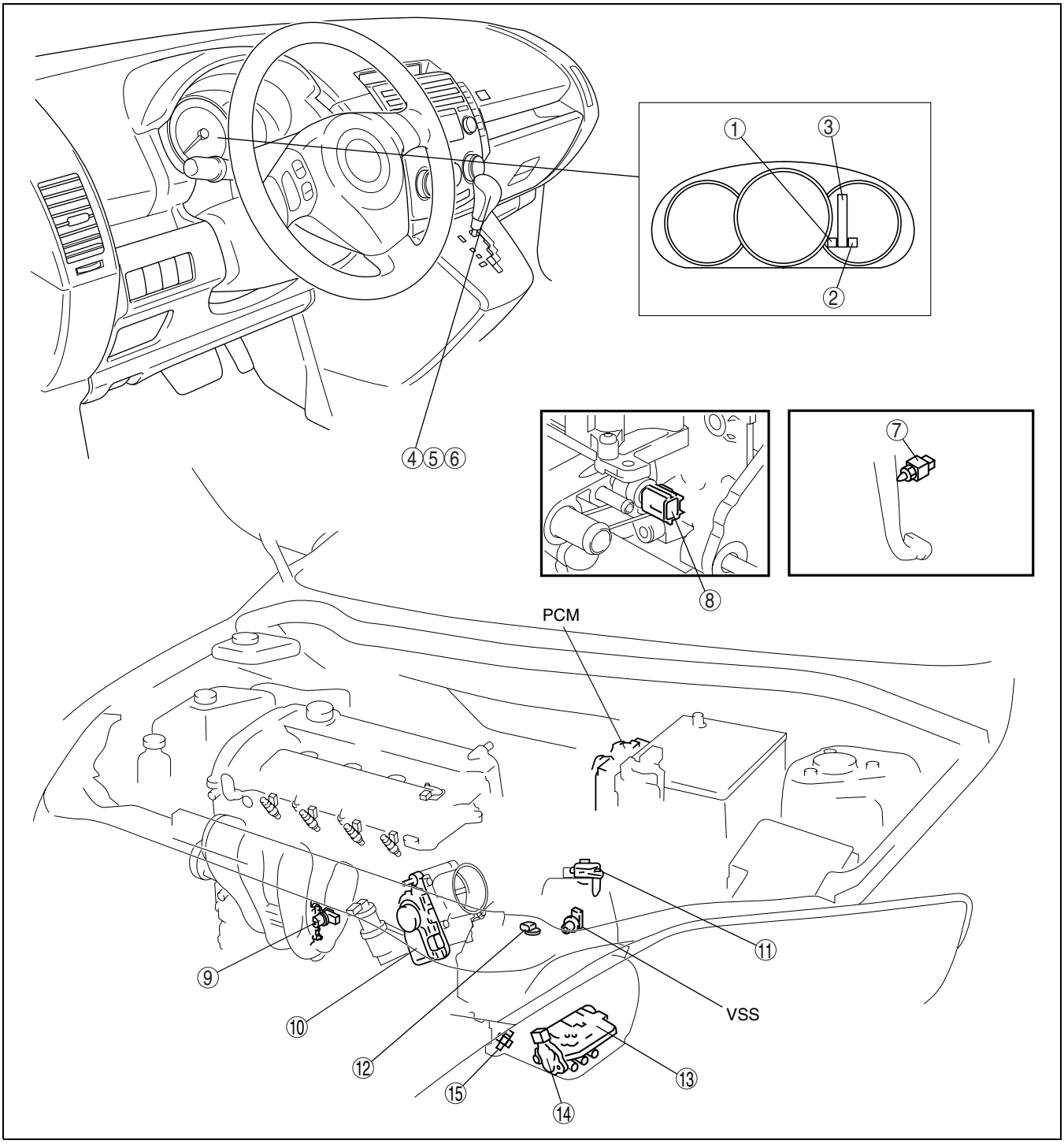

DPE517ZT1007

1	AT warning light
2	Gear position indicator light
3	Selector indicator light
4	M range switch
5	Up switch
6	Down switch
7	Brake switch
8	ECT sensor

9	CKP sensor
10	TP sensor
11	MAF sensor
12	Input/turbine speed sensor
13	Control valve (With TFT sensor and solenoid valves)
14	TR switch
15	Oil pressure switch

ELECTRONIC CONTROL SYSTEM BLOCK DIAGRAM [FN4A-EL]

DPE051718880T03

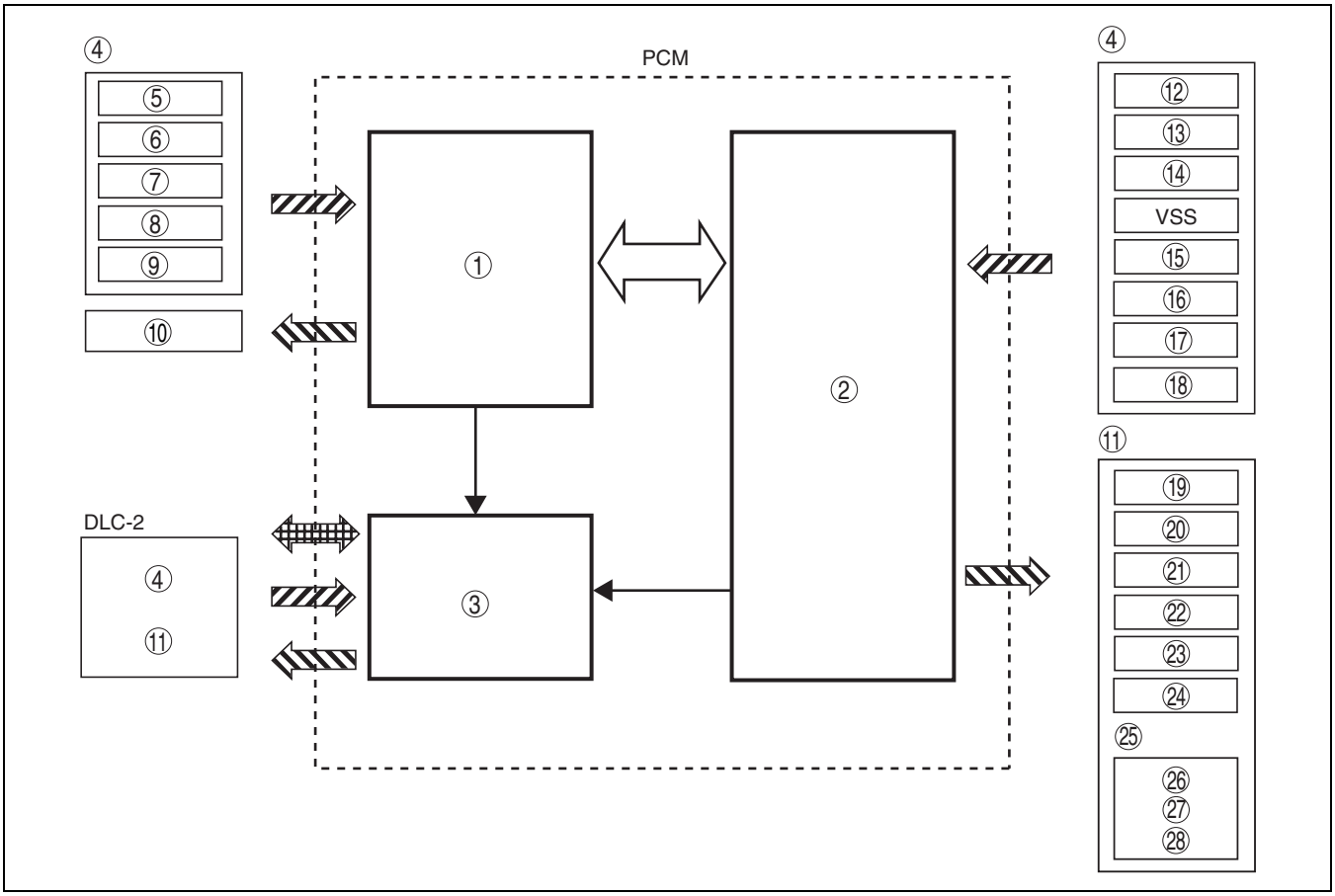

DPE517ZT1008

1	Engine control system
2	Transaxle control system
3	On-board diagnostic system
4	Input signals
5	MAF sensor
6	TP sensor
7	CKP sensor
8	Brake switch
9	ECT sensor
10	Engine control output signals
11	Output signals
12	TR switch
13	TFT sensor
14	Input/turbine speed sensor

15	M range switch
16	Up switch
17	Down switch
18	Oil pressure switch
19	Pressure control solenoid
20	Shift solenoid A
21	Shift solenoid B
22	Shift solenoid C
23	Shift solenoid D
24	Shift solenoid E
25	Instrument cluster
26	Gear position indicator light
27	AT warning light
28	Selector indicator light

ELECTRONIC CONTROL ITEMS AND CONTENTS [FN4A-EL]

DPE051718880T04

Item	Content
Line pressure control	• Using linear type pressure control solenoids, adjusts line pressure according to engine load condition and vehicle driving condition.
Shift control	• Detects engine load condition and vehicle speed, and switches to the most suitable gear position according to the preset shift diagram. • In D range, automatically switches between POWER and NORMAL modes according to accelerator pedal depressing speed.
Clutch pressure direct control (Direct electric shift control)	• With duty-cycle type shift solenoids A, B, and C, directly performs electronic control for clutch engagement pressure according to engine load condition and vehicle driving condition.

Item	Content
Feedback control	• Performs real-time feedback correction for clutch engagement pressure to achieve target shifts. • Performs optimal correction for clutch engagement pressure to reduce changes in engine performance and/or elapsed transaxle.
Engine-transaxle total control	• Optimally controls engine output torque when shifting. • Operates optimal clutch engagement pressure corresponding to engine output torque.
TCC control	• According to preset TCC point, performs TCC operation via smooth TCC.
Slope mode control	• Changes the shift point to prevent frequent shifting up/down when climbing hills and descending hills.
On-board diagnostic system	• Detects and/or memorizes failure of input/output part and transaxle condition.
Manual mode shift control	• Shifts to selected gear position by manual shifting of the selector lever forward and back.

COMPONENT DESCRIPTIONS (ELECTRONIC CONTROL) [FN4A-EL]

DPE051718880T05

Part name			Function
Input system	M range switch		• Selects driving modes (M range) and changes driving patterns.
	Up switch		• Detects shift up request.
	Down switch		• Detects shift down request.
	TR switch		• Detects the selector lever ranges/positions.
	TP sensor		• Detects the throttle valve opening angle.
	Input/turbine speed sensor		• Detects the forward clutch drum (input) revolution speed.
	Oil pressure switch		• Detects the forward clutch pressure.
	VSS		• Detects the differential gear case (output) revolution speed.
	Brake switch		• Detects the use of service brake.
	TFT sensor		• Detects the ATF temperature.
	ECT sensor		• Detects the engine coolant temperature.
	CKP sensor		• Detects the engine revolution speed.
	MAF sensor		• Detects the intake air amount.
Output system	Linear type	Pressure control solenoid	• Adjusts the line pressure.
	Duty-cycle type	Shift solenoid A	• Controls the clutch engagement pressure.
		Shift solenoid B	• Controls the clutch engagement pressure.
		Shift solenoid C	• Controls the clutch engagement pressure.
	ON/OFF type	Shift solenoid D	• Switches the hydraulic passages for bypass valve and 3-4 shift valve.
		Shift solenoid E	• Switches the hydraulic passages for low and reverse shift valve, TCC, and control valve.
	AT warning light		• Illuminates when failure is detected by diagnosis function
	Speedometer signal		• Outputs the vehicle speed signal to speedometer

INPUT/OUTPUT SIGNAL AND RELATED CONTROLS [FN4A-EL]

DPE051718880T06

Component	Control item								
	Line pressure control	Shift control	Clutch pressure direct control (Direct electric shift control)	Feedback control	Engine-transaxle total control	Torque converter clutch control	Slope mode control	On-board diagnostic function	Manual mode shift control
Input									
M range switch		X	X						X
Up switch		X	X						X
Down switch		X	X						X
TR switch	X	X	X						
TP sensor	X	X	X			X		X	

Component	Control item								
	Line pressure control	Shift control	Clutch pressure direct control (Direct electric shift control)	Feedback control	Engine-transaxle total control	Torque converter clutch control	Slope mode control	On-board diagnostic function	Manual mode shift control
Input/turbine speed sensor	X	O	X	X		X		X	
VSS	X	X	X			X	X	X	
Brake switch						X	X		
TFT sensor	X	X	X	X		X		X	
ECT sensor						X		X	
CKP sensor	X		X		X	X		X	
MAF sensor	X		X	X	X		X	X	
Oil pressure switch		X	X						
Output									
Pressure control solenoid	X							X	
Shift solenoid A		X	X	X		X	X	X	
Shift solenoid B		X	X	X				X	
Shift solenoid C		X	X	X				X	
Shift solenoid D		X					X	X	
Shift solenoid E		X				X	X	X	
AT warning light		X						X	
Speedometer signal									

X : Available

O : Back up

LINE PRESSURE CONTROL OUTLINE [FN4A-EL]

DPE051718880T07

- The PCM determines the optimum line pressure and drives the liner-type pressure control solenoid based on input signals in accordance with the vehicle driving conditions including the engine torque (calculated from throttle opening angle, vehicle speed, engine speed, gear position, intake air rate, and other operational

parameters). As a result, the line pressure is controlled very accurately and closely.

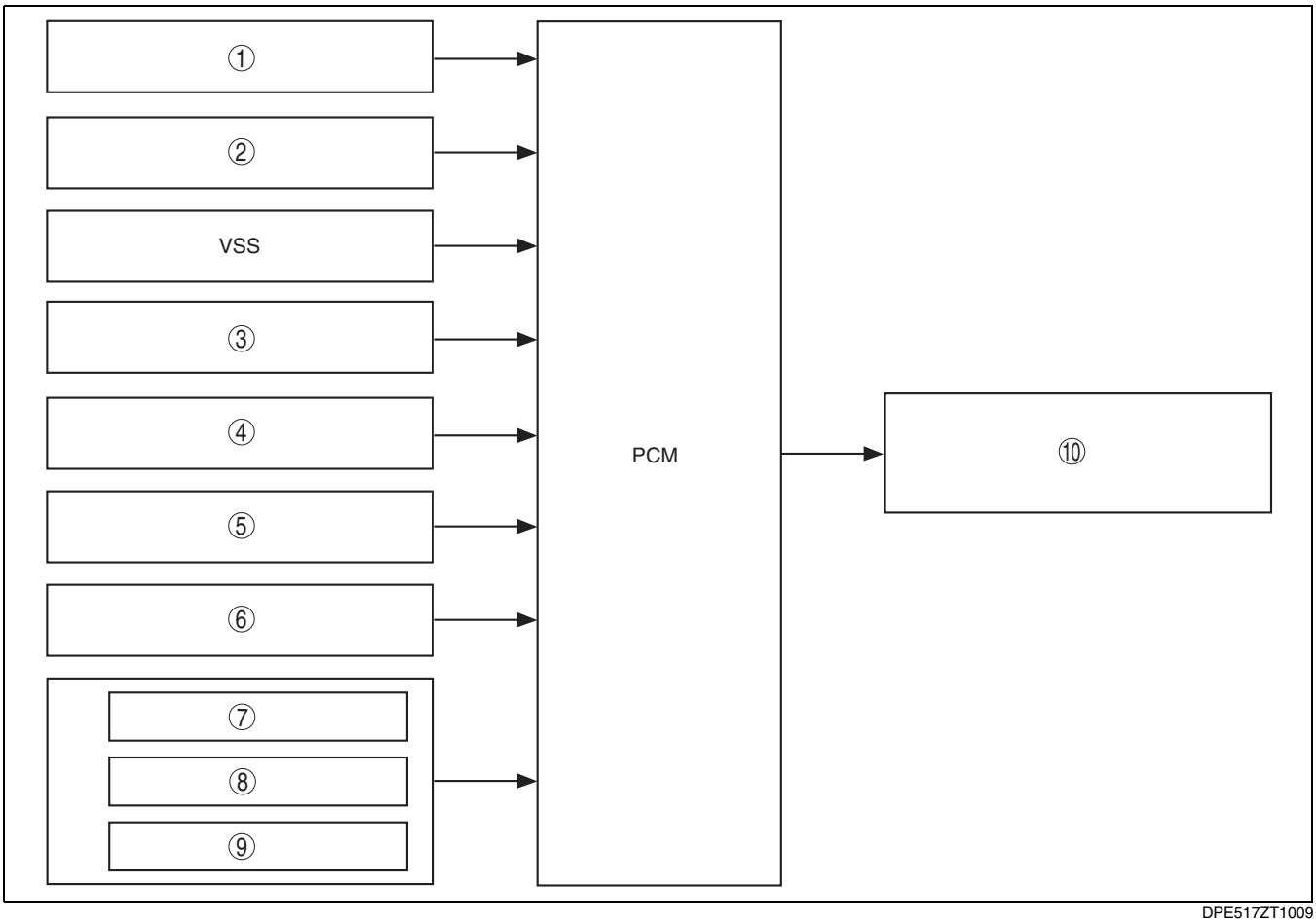

DPE517ZT1009

1	TR switch
2	Input/turbine speed sensor
3	TP sensor
4	CKP sensor
5	MAF sensor

6	TFT sensor
7	M range switch
8	Up switch
9	Down switch
10	Pressure control solenoid

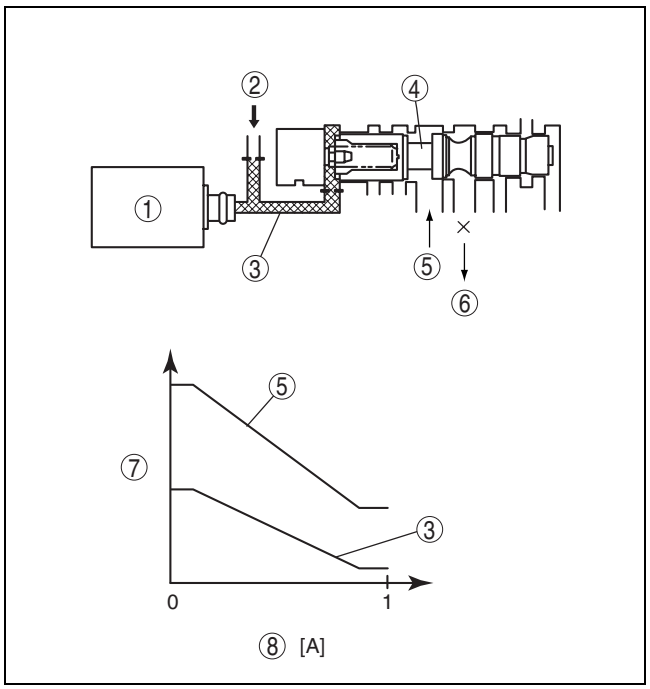

B3E0517T029

1	Pressure control solenoid
2	Solenoid reducing pressure
3	Pressure control solenoid pressure
4	Pressure regulator valve
5	Line pressure
6	Drain
7	Hydraulic pressure
8	Electrical current value

PRESSURE CONTROL SOLENOID (LINEAR TYPE) OUTLINE [FN4A-EL]

DPE051721101T01

- A pressure control solenoid with high stability in hydraulic pressure has been adopted for the line pressure control.
- Because the pressure control solenoid controls the hydraulic pressure according to the current value, the degree of freedom in control increases. The controllability is maintained even under aeration, and pressure variation can be reduced.

PRESSURE CONTROL SOLENOID (LINEAR TYPE) OPERATION [FN4A-EL]

DPE051721101T02

- By changing the electrical current value (0 A—1 A) inside the solenoid, the pressure control solenoid adjusts the hold power of the hold pressure valve, controlling the pressure control solenoid pressure to the prescribed hydraulic pressure.

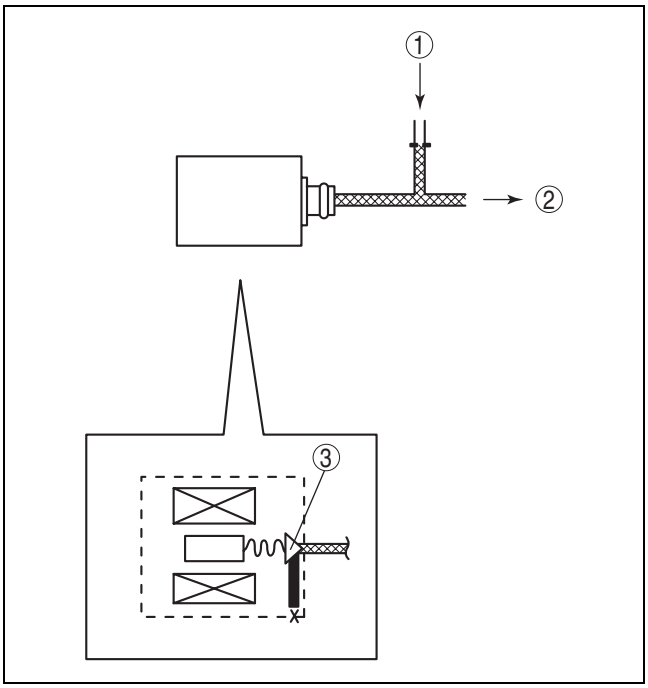

B3E0517T030

1	Solenoid reducing pressure
2	To pressure regulator valve
3	Hold pressure valve

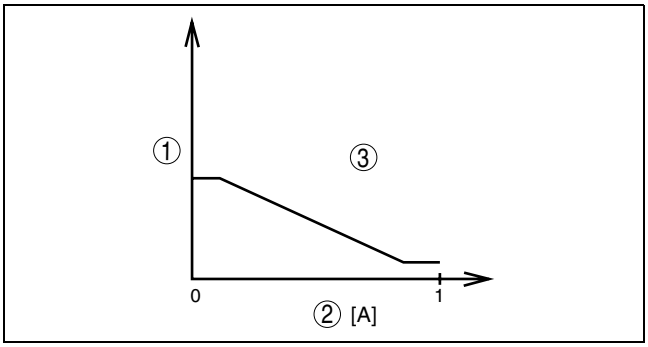

B3E0517T031

1	Hydraulic pressure
2	Electrical current value
3	Pressure control solenoid pressure

SHIFT CONTROL STRUCTURE [FN4A-EL]

DPE051718880T08

Features

- An automatic shift system in the D range and a manual shift system have been adopted for the AT system. The automatic shift system, with automatic shifting between 1GR and 4GR. The manual shift system allows option gear position selection by manually operating the selector lever forward and back.
- In the D range, automatic shifting occurs between 1GR and 4GR. Moreover, in the M range, the specialized AT manual mode shift control is available.
  — Shifting is controlled by the PCM which, based on range/position determination, selects and determines the shift diagram. In the D range the automatic shift diagram is followed and in the M range the manual mode shift diagram is followed.
- The TCC is engaged in D range, 4GR.
- The selector lever indicator light and the gear position indicator light are built into the instrument cluster.

Structure
System diagram

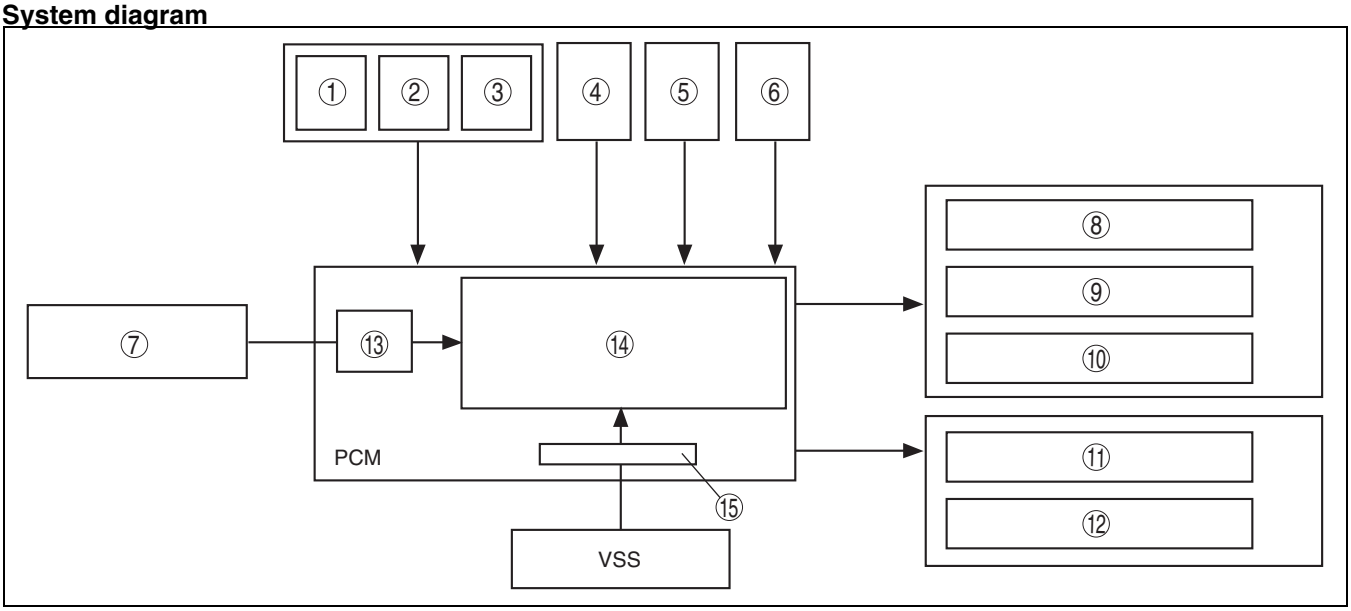

DPE517ZT1010

1	M range switch
2	Up switch
3	Down switch
4	TFT sensor
5	Oil pressure switch
6	TR switch
7	TP sensor
8	Shift solenoid A

9	Shift solenoid B
10	Shift solenoid C
11	Shift solenoid D
12	Shift solenoid E
13	Throttle opening angle
14	Shift diagram
15	Vehicle speed

05

SHIFT SOLENOID A, B AND C (DUTY-CYCLE TYPE) OUTLINE [FN4A-EL]

DPE051721101T03

- A clutch pressure direct control, which supplies the clutch pressure directly to each clutch and/or brake, has been adopted. A three-way duty-cycle type solenoids with excellent controllability have been adopted, to improve response.

SHIFT SOLENOID A, B AND C (DUTY-CYCLE TYPE) FUNCTION [FN4A-EL]

DPE051721101T04

- The duty-cycle type shift solenoid adjusts the amount of output pressure according to the signal from the PCM, and controls the pressure of each clutch.
- The duty-cycle type shift solenoid, which switches on/off at 50 Hz (20 ms cycle) and controls the output pressure, is adopted. By changing the on time ratio a cycle (0—100%), the solenoid adjusts the time ratio of the open (supply) and close (drain), and maintains the clutch pressure at the designated hydraulic pressure. As a result, the clutch pressure rises when the duty ratio (50 Hz on time ratio) is reduced, and falls when the duty ratio is raised.

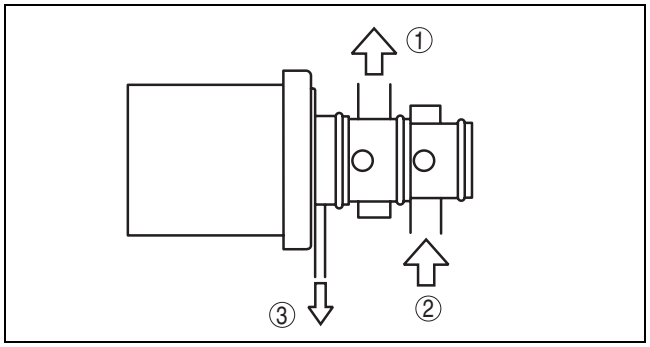

B3E0517T035

1	Output port (clutch pressure)
2	Supply port (line pressure)
3	Drain

SHIFT SOLENOID A, B AND C (DUTY-CYCLE TYPE) OPERATION [FN4A-EL]

DPE051721101T05

Open:When the electrical current does not flow, the supply port (line pressure) in the solenoid opens and is

engaged with the output port (clutch pressure). As a result, hydraulic pressure is supplied to the hydraulic passage for the clutch pressure.

Close:When the electrical current flows, the supply port (line pressure) in the solenoid closes and the output port (clutch pressure) and the drain port are engaged to drain the clutch pressure.

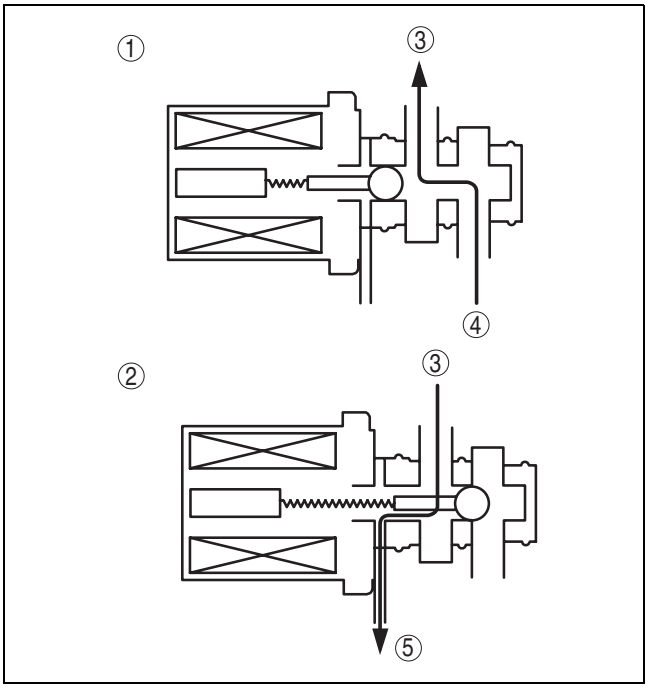

B3E0517T036

1	Electrical current does not flow (Open)
2	Electrical current flows (Close)
3	Output port (clutch pressure)
4	Supply port (line pressure)
5	Drain

SHIFT SOLENOID D AND E (ON/OFF TYPE) OUTLINE [FN4A-EL]

DPE051721101T06

- A compact, light-weight three-way solenoid has been adopted for shift solenoids D and E to reduce consumption discharge amount.

Shift solenoid	Function
Shift solenoid D	Switches the bypass valve and 3-4 shift valve.
Shift solenoid E	Switches the low and reverse shift valve and TCC control valve.

SHIFT SOLENOID D AND E (ON/OFF TYPE) FUNCTION [FN4A-EL]

DPE051721101T07

- An on/off type solenoid valve switches the supply drain of output port according to the electrical current flow switching.

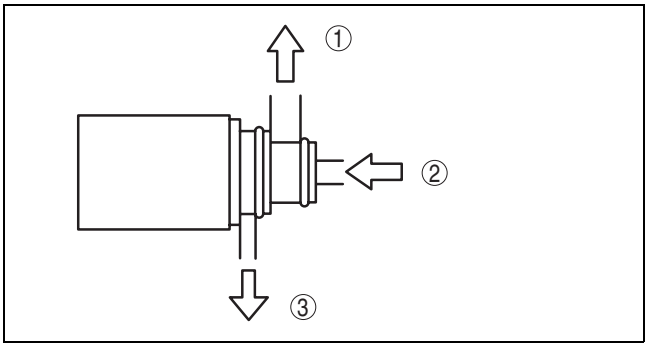

B3E0517T037

1	Output port
2	Supply port (solenoid reducing pressure)
3	Drain

SHIFT SOLENOID D AND E (ON/OFF TYPE) OPERATION [FN4A-EL]

DPE051721101T08

On: When the electrical current flows, the output port and the supply port (solenoid reducing pressure) are engaged in the solenoid, and the output pressure becomes equivalent to the solenoid reducing pressure.

Off: When the electrical current does not flow, the output port and the drain port are engaged in the solenoid, and the output pressure is drained.

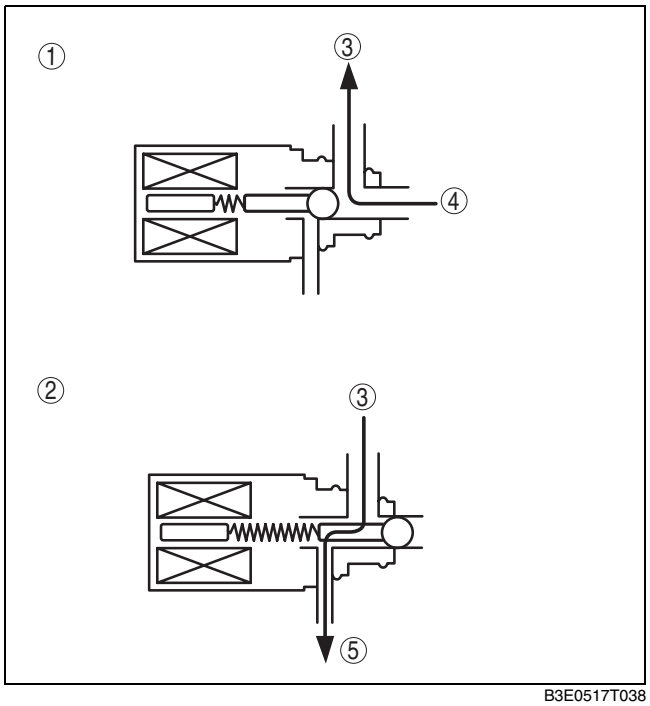

B3E0517T038

1	Electrical current flows
2	Electrical current does not flow
3	Output port
4	Supply port (solenoid reducing pressure)
5	Drain

DRIVING MODE DETERMINATION OPERATION [FN4A-EL]

DPE051718880T09

D range

- When above a certain vehicle speed and the accelerator pedal depressing speed is above the preset value, the driving mode is automatically switched to POWER mode, and shifts the shift point to high speed side.
- When the ATF temperature is high or low, the mode is automatically switched to each shift pattern: when the ATF temperature is high, the TCC point is shifted to low speed side, and when the ATF temperature is low, 4GR is inhibited.

M range

- When the selector lever is shifted over from the D to M range position, the M range switch in the selector lever component turns on, sending a manual mode command signal to the PCM which activates the manual mode shift control.

DIRECT ELECTRIC SHIFT CONTROL OUTLINE [FN4A-EL]

DPE051718880T10

- The PCM determines the optimum clutch engagement pressure and drives the duty-cycle shift solenoids based on input signals in accordance with the vehicle driving conditions including the engine torque (calculated from throttle opening angle, vehicle speed, engine speed, gear position, intake air rate, and other operational parameters).
- By driving the duty-cycle solenoid valves, and performing the electronic control of the clutch engagement pressure directly through the PCM, minute hydraulic control, which could not be obtained by the clutch engagement pressure control with the accumulator, is obtained.

Block diagram

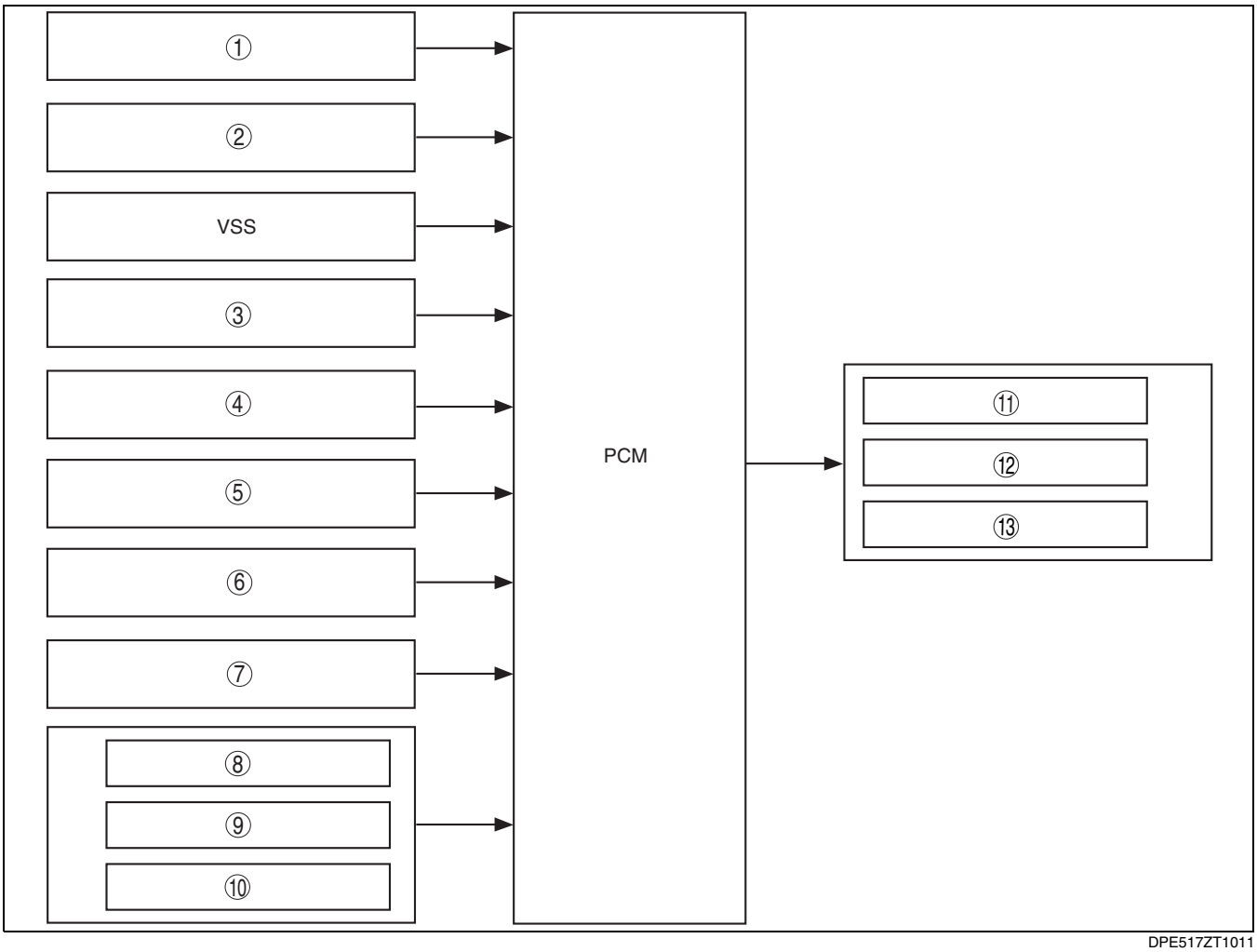

DPE517ZT1011

1	TR switch
2	Input/turbine speed sensor
3	Oil pressure switch
4	TP sensor
5	CKP sensor
6	MAF sensor
7	TFT sensor

8	M range switch
9	Up switch
10	Down switch
11	Shift solenoid A
12	Shift solenoid B
13	Shift solenoid C

DIRECT ELECTRIC SHIFT CONTROL OPERATION [FN4A-EL]

DPE051718880T11

When Shifting N→D or N→R Shift

- When shifting N→D or N→R, the pressure control solenoid is driven to control the clutch engagement pressure optimally.

Up-Down Shift

- The clutch engagement pressure is directly controlled to be optimal by the duty-cycle solenoid valves.

- When shifting 2GR→3GR, 3GR→4GR, 3GR→2GR, or 4GR→3GR, the clutch pressures of engagement side and release side are controlled simultaneously. As a result, the clutch capacities of both clutches are controlled relatively when switching the clutches. This prevents sudden increases in engine speed and clutch interlocks during shifting, realizing smooth and responsive shifting.

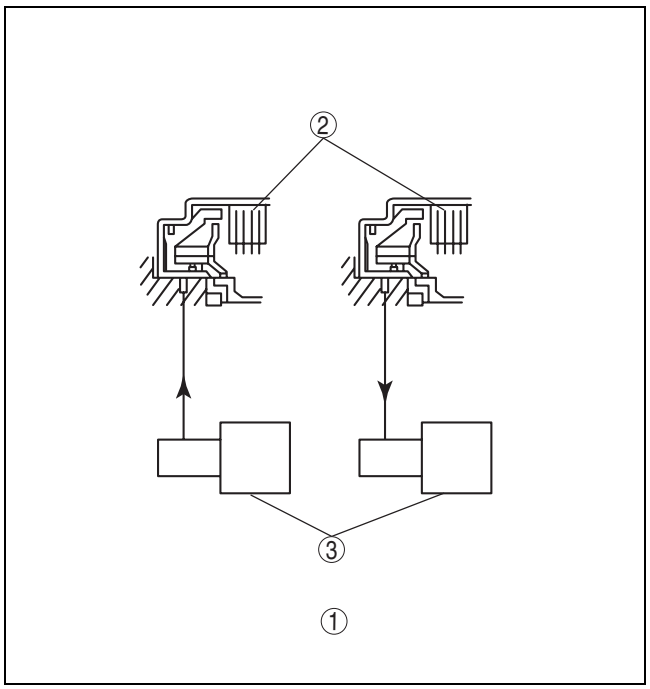

B3E0517T040

1	When shifting
2	Clutch
3	Shift solenoid valve (duty-cycle type)

MANUAL MODE SHIFT CONTROL STRUCTURE [FN4A-EL]

DPE051718880T12

Features

- The manual mode shift control is activated by moving the selector lever from the D to M range position (selector lever is shifted over toward driver side).
- Manual mode shift control with a manual shifting system allowing selection of gear positions by manual operation of the selector lever forward (–) and back (+) has been adopted. Moreover, engine braking for all gears in manual mode according to the gear ratio is available.
  - — Shifting between 1GR and 2GR when the vehicle is stopped is possible. Moreover, when shifting from the D to M range while driving, the same gear position is maintained.
  - — Consecutive shifting in the M range has been adopted. When shifting down from M range 4GR or 3GR, and shifting up from M range 1GR or 2GR, one gear can be skipped over by rapidly tapping the selector lever two times in the down-shift (–) direction or up-shift (+) direction.
- Selector lever position and gear position indicator lights, built into the instrument cluster, have been adopted. The gear position indicator light displays the selected gear position.
  - — The selector indicator light includes a selector lever position indicator that displays selector lever positions and, a gear position indicator light that displays gear positions.

Structure
System diagram

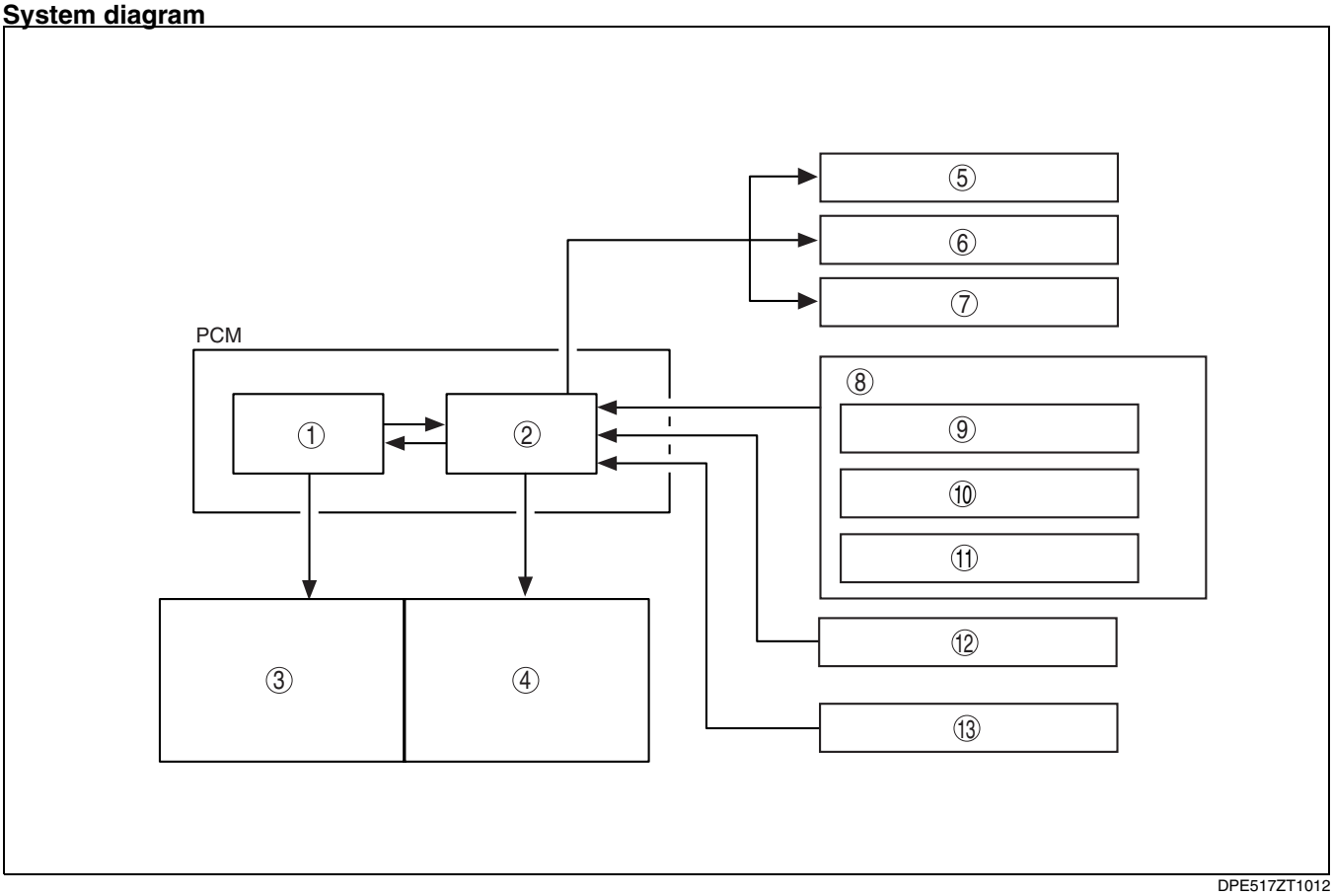

DPE517ZT1012

1	Engine control system
2	Transaxle control system
3	Engine
4	Automatic transaxle
5	AT warning light
6	Selector indicator light
7	Gear position indicator light

8	Selector lever component
9	M range switch
10	Up switch
11	Down switch
12	TR switch
13	TFT sensor

MANUAL MODE SHIFT CONTROL OPERATION [FN4A-EL]

DPE051718880T13

Manual mode shift

- When the selector lever is shifted over from the D to M range position, the M range switch in the selector lever component turns on, sending a manual mode command signal to the PCM which activates the manual mode shift control.
- When in manual mode and the selector lever is operated in the back (+) direction, the up switch in the selector lever component is turned on and an up-shift command signal is input to the PCM.
  — The PCM, triggered by the up-shift command signal, carries out shifting by outputting an operation signal to the shift solenoid if the ATF temperature is not low (for 3GR only), vehicle speed is higher than the set speed and the gear position is 3GR or lower.
- Conversely, when the selector lever is operated in the forward (–) direction, the down switch in the selector lever component turns on, and a down-shift command signal is input to the PCM.
  — The PCM, triggered by the down-shift command signal, carries out shifting by outputting an operation signal to the shift solenoid if the vehicle speed is less than the set speed and the gear position is 2GR or above.
- The PCM utilizes a specialized M range automatic shift diagram. Due to this, restriction of manual shift demand and automatic control of downshifting is carried out, reducing load on the ATX, preventing engine over-rev and ensuring drive stability.

Condition	Shift control	Note
2GR→3GR up-shift command at low speed	• To reduce load on the ATX, upshifting is inhibited until vehicle reaches speed possible for upshifting	—
3GR→4GR up-shift command at low speed		
3GR→4GR up-shift command, low ATF temperature	• To reduce load on the ATX, upshifting to 4GR is inhibited	
4GR→3GR down-shift command, above set speed	• To prevent engine over-rev, downshifting is inhibited until vehicle reaches speed possible for downshifting	• Gear position indicator light flash to alert driver
3GR→2GR down-shift command, above set speed		
2GR→1GR down-shift command, above set speed		
In 4GR deceleration, speed goes below coast-down set speed (deceleration down-shift)	• To assure drive stability, automatically downshifts from 4GR to 3GR	—
In 3GR deceleration, speed goes below coast-down set speed (deceleration down-shift)	• To assure drive stability, automatically downshifts from 3GR to 1GR	

Shift diagram

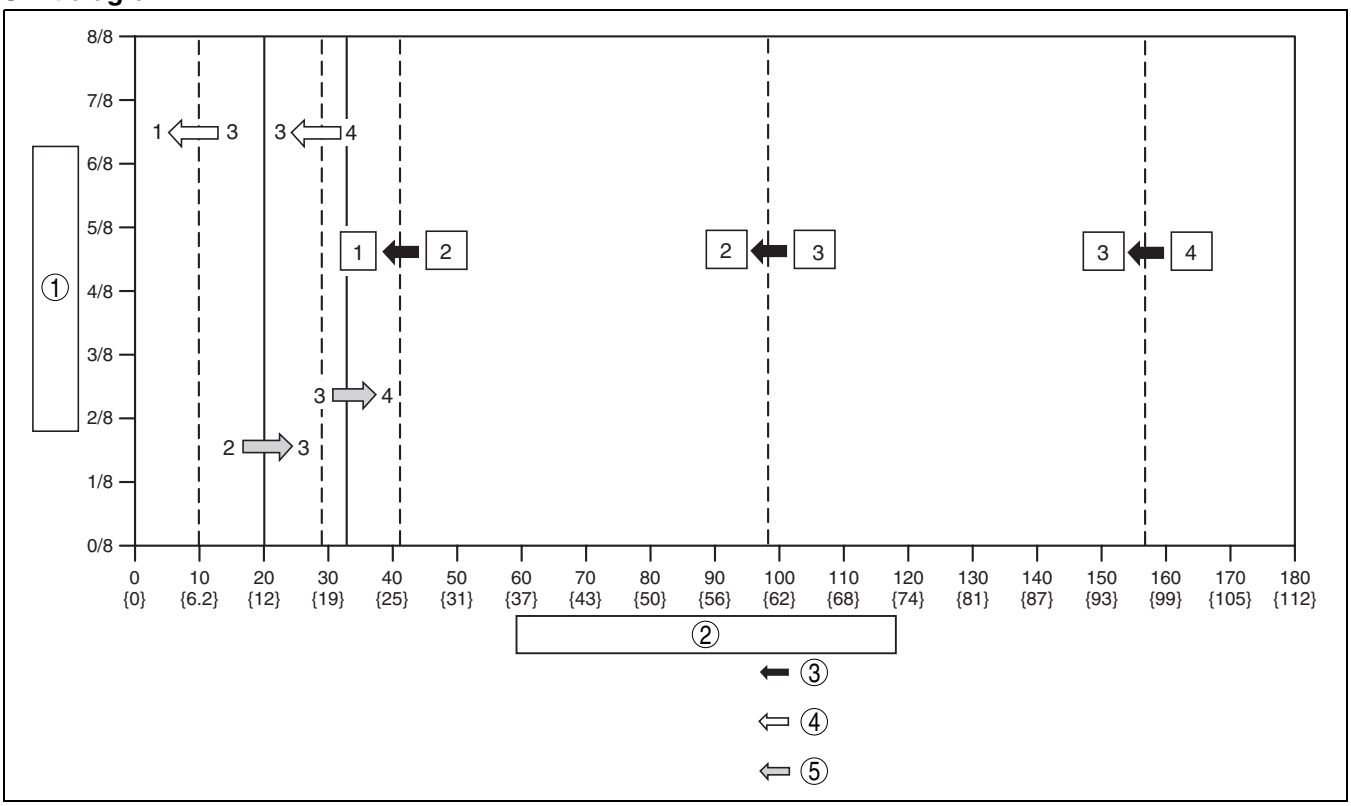

DPE517ZT1013

1	Throttle opening
2	Vehicle speed km/h {mph}
3	Downshifting is inhibited until vehicle reaches speed possible for downshifting
4	When decelerating below set vehicle speed, executes automatic downshifting
5	Upshifting is inhibited until vehicle reaches speed possible for upshifting

AT WARNING LIGHT FUNCTION [FN4A-EL]

DPE051721101T09

- The AT warning light illuminates to alert the driver of a malfunction in the automatic transaxle.

AT WARNING LIGHT CONSTRUCTION/OPERATION [FN4A-EL]

DPE051721101T10

- The AT warning light is built into the instrument cluster.
- The AT warning light illuminates when the instrument cluster receives a warning signal from the PCM via CAN communication.
- The PCM sends a warning signal to the instrument cluster via CAN communication when it detects a malfunction.

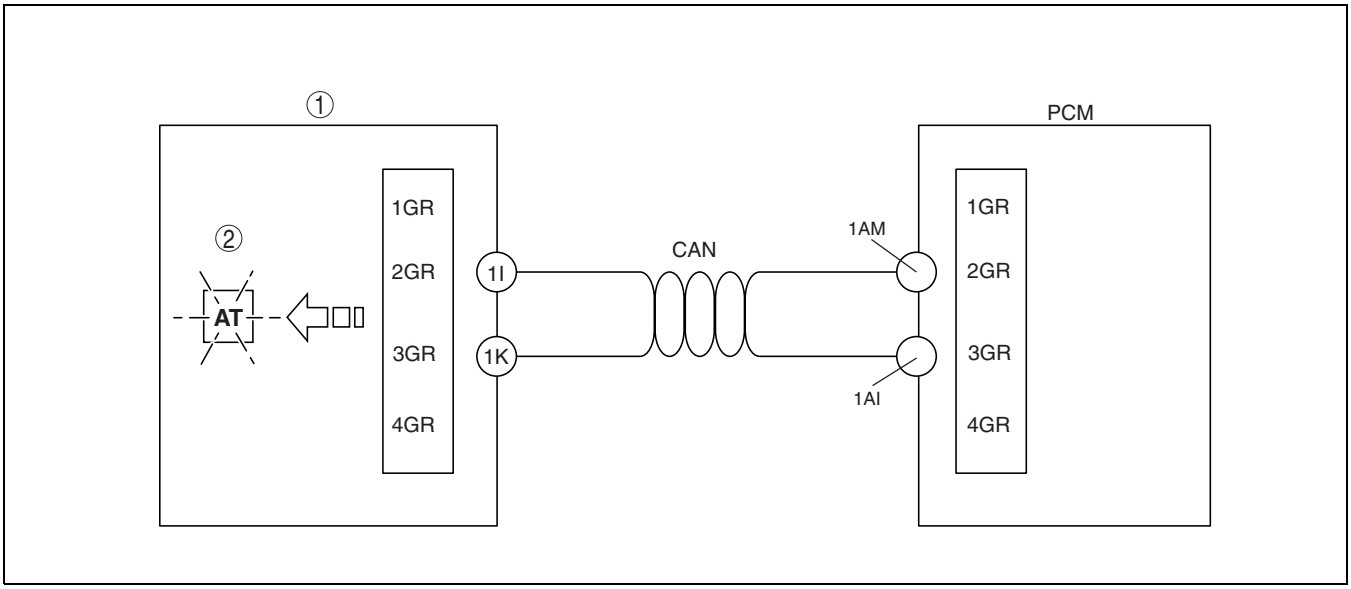

DPE517ZT1014

1	Instrument cluster
2	AT warning light

SELECTOR INDICATOR LIGHT FUNCTION [FN4A-EL]

DPE051721101T11

- The selector indicator light has a selector lever position light, and a gear position indicator light that indicates gear position.
- When downshifting is cancelled in the M range, the gear position indicator light flashes two times to alert the driver that downshifting is cancelled.

SELECTOR INDICATOR LIGHT CONSTRUCTION/OPERATION [FN4A-EL]

DPE051721101T12

Construction

- The selector indicator light is built into the instrument cluster.
- When in the P, R, N or D range, the PCM detects the selector lever position based on an analog signal from the TR switch. When in the M range, the PCM detects the selector lever position based on a signal from the M range switch inside the selector lever component.
- When the instrument cluster receives a range signal or a gear position signal from the PCM via CAN communication, the selector lever position and the gear position indicator lights illuminate or flash accordingly.

Operation

Gear position indicator light flash

- When the driver's down-shift operation is cancelled, the gear position indicator light flash twice.
  - — When the PCM cancels a down-shift operation, all of the signals are pulsed ON/OFF and when finally input to the instrument cluster, the on signal (ex. M1 signal when in 1GR) and the remaining three off signals (M2, M3, M4) are reversed to off and on signals respectively.
- Based on a combination of input signals from the PCM, the instrument cluster determines the gear number (1GR displayed as "1"), and flashes the gear position number in the gear position indicator light and the selector indicator "M" light.

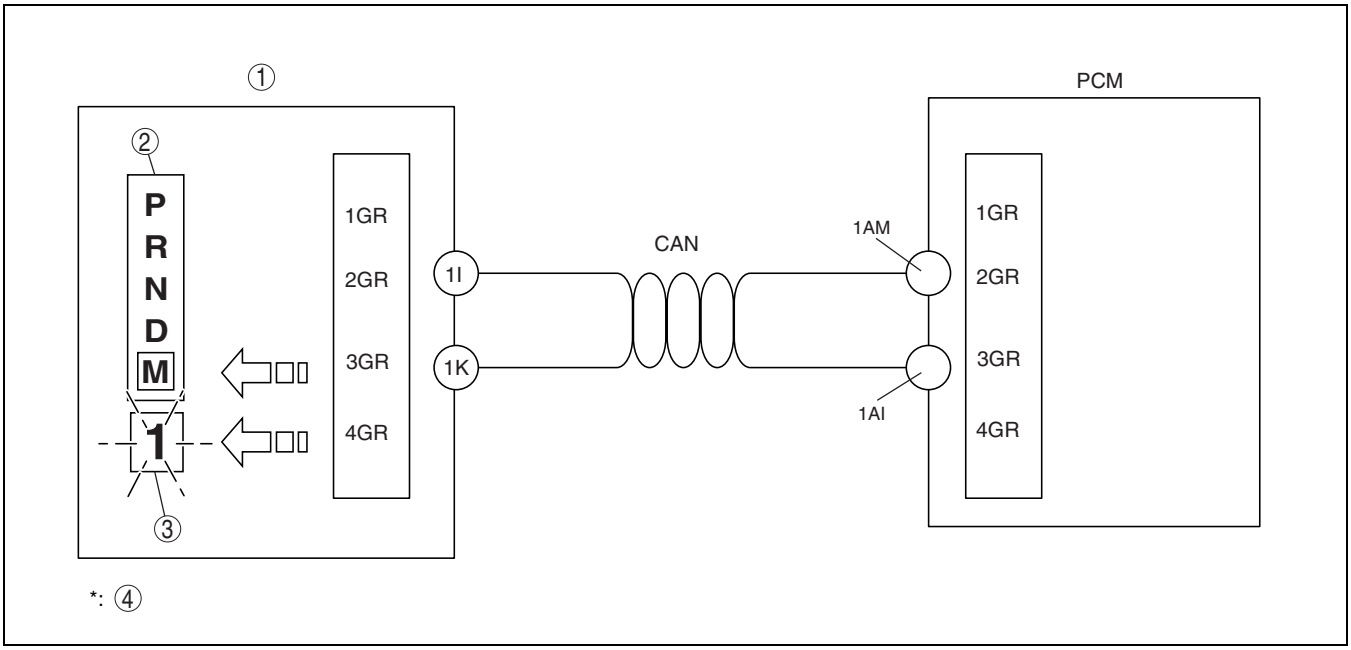

DPE517ZT1015

1	Instrument cluster
2	Selector indicator light

3	Gear position indicator light
4	Above diagram shows flashing when in 1GR

FEEDBACK CONTROL STRUCTURE [FN4A-EL]

DPE051718880T20

Features

- Regulation of hydraulic pressure for engagement and disengagement is optimized through feedback and learning correction of the clutch engagement pressure.

Structure

Block diagram

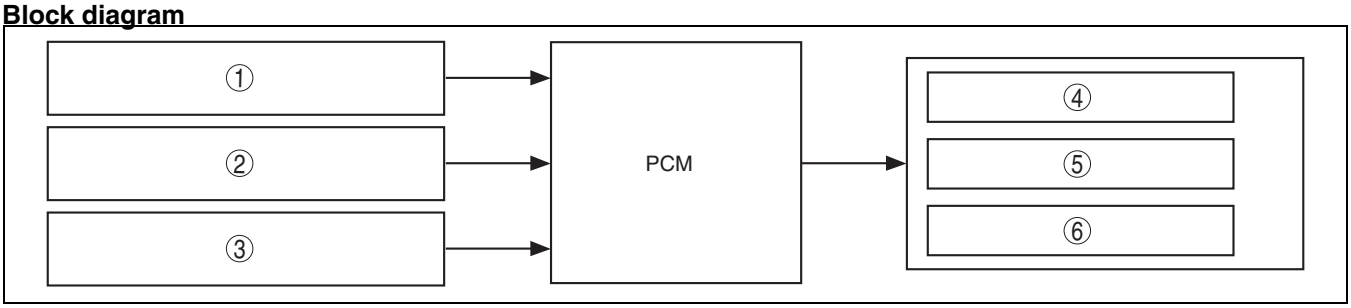

DPE517ZT1016

1	TFT sensor
2	Input/turbine speed sensor
3	MAF sensor

4	Shift solenoid A
5	Shift solenoid B
6	Shift solenoid C

FEEDBACK CONTROL OPERATION [FN4A-EL]

DPE051718880T14

- When shifting, real-time feedback correction of the clutch engagement pressure is operated by the duty-cycle solenoid valves so that the speed change of the turbine shaft (change of the turbine rotating speed) matches the predetermined target value.

- Also, the clutch engagement pressure is optimally corrected so as to absorb the changes in engine performance and/or of elapsed transaxle, according to the shift results in the past.

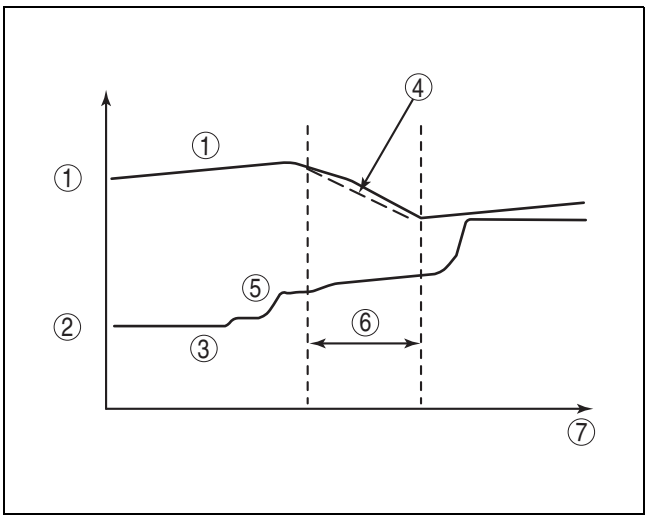

B3E0517T042

1	Turbine rotating speed
2	Hydraulic pressure
3	Clutch engagement pressure
4	Target turbine rotating speed
5	Controls turbine change rate at start of shift so that target value is obtained
6	Performs feedback control so that target change rate of the turbine rotating speed is obtained
7	Time

ENGINE-TRANSAXLE TOTAL CONTROL STRUCTURE [FN4A-EL]

DPE051718880T21

Features

- When shifting, engine output torque is controlled for optimized clutch capacity.

Structure

Block diagram

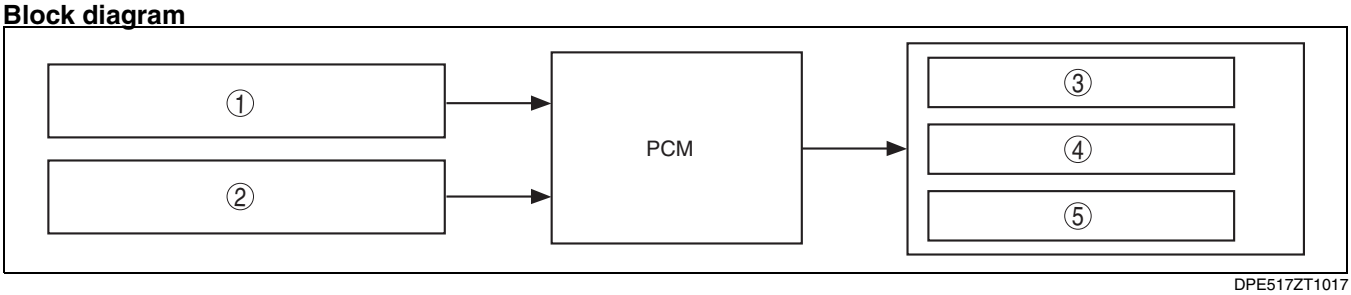

DPE517ZT1017

1	CKP sensor
2	MAF sensor
3	Shift solenoid A

4	Shift solenoid B
5	Shift solenoid C

ENGINE-TRANSAXLE TOTAL CONTROL OPERATION [FN4A-EL]

DPE051718880T15

- When shifting, engine output torque is reduced temporarily and the clutch is engaged smoothly by engine ignition timing retard control to reduce the fluctuation of the output shaft torque during shifting.

- Engine output torque is estimated according to the engine speed, intake air amount, etc., and the clutch engagement pressure is determined according to the engine output torque. Thus the set accuracy of the clutch hydraulic pressure control is improved, realizing smooth shifting.

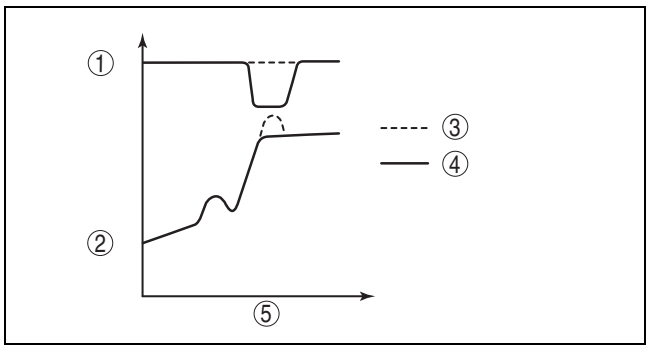

B3E0517T044

1	Engine output torque
2	Output shaft torque
3	Without engine ignition timing retard control
4	With engine ignition timing retard control
5	Time

TORQUE CONVERTER CLUTCH (TCC) CONTROL OUTLINE [FN4A-EL]

DPE051718880T16

- The PCM selects and determines the TCC diagram based on the shift control results. With this TCC diagram, and according to the signals from VSS, TP sensor, and other switches and sensors, the PCM sends the signal to the duty-cycle type shift solenoids A and on/off type shift solenoid E to operate TCC control.
- Smooth TCC control, which engages the TCC gradually, has been adopted to reduce the shock when the TCC engages.

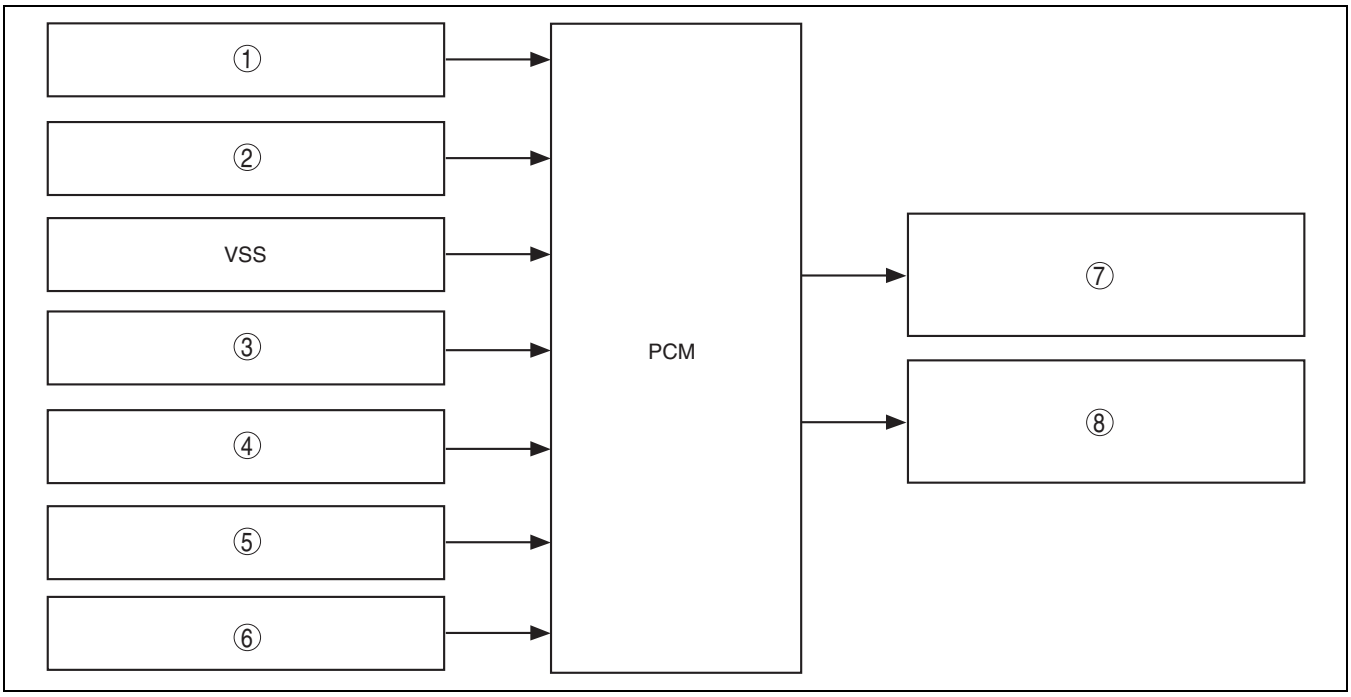

DPE517ZT1018

1	TFT sensor
2	Input/turbine speed sensor
3	TP sensor
4	CKP sensor

5	Brake switch
6	ECT sensor
7	Shift solenoid A
8	Shift solenoid E

TORQUE CONVERTER CLUTCH (TCC) OPERATION [FN4A-EL]

DPE051718880T17

TCC Release

- The PCM sends an off signal to shift solenoid E when the TCC is determined to be released. In this condition, the TCC control valve is pushed to the right by the spring force, and torque converter pressure acts on the

torque converter front chamber, releasing the TCC from the converter cover.

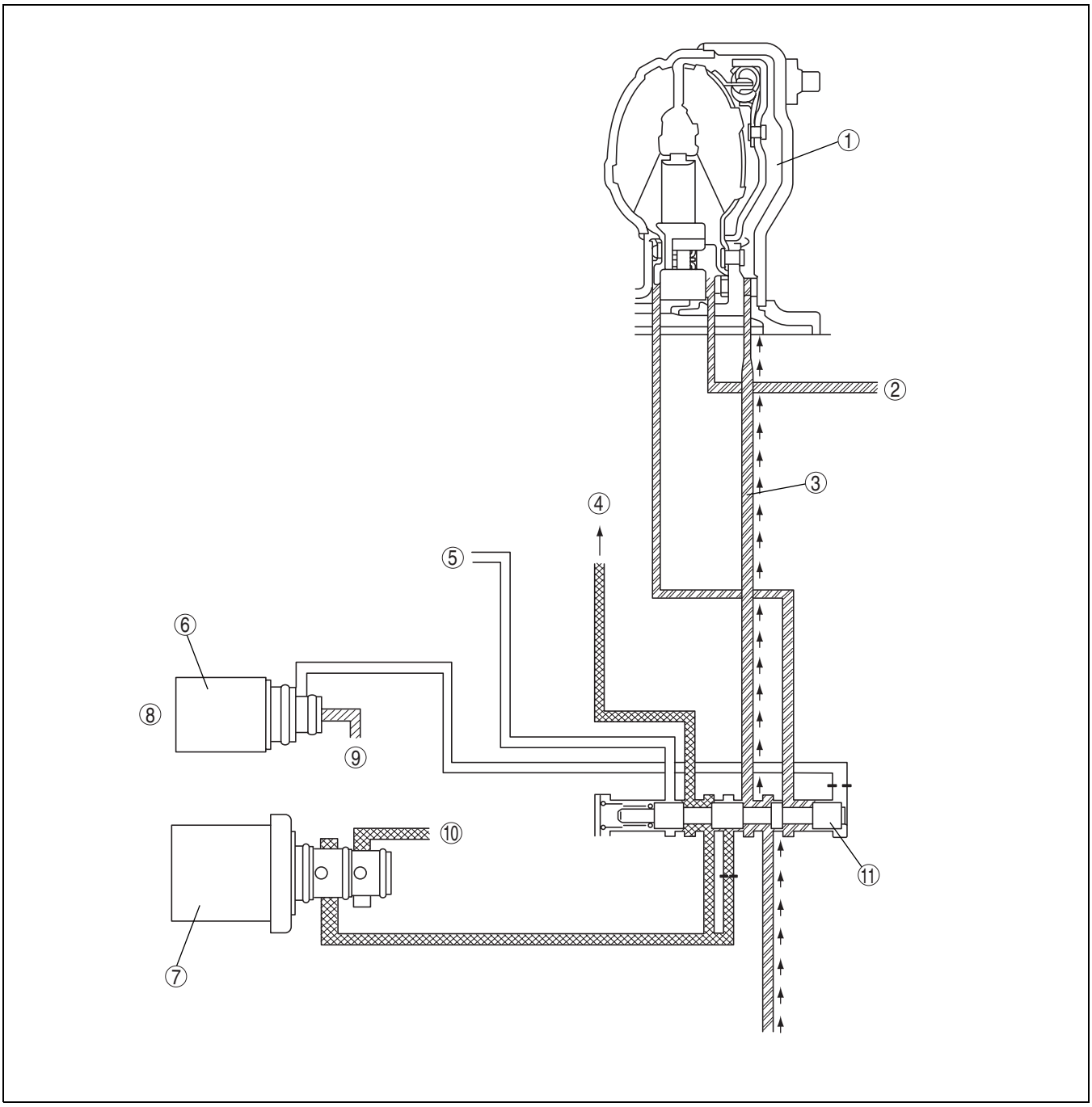

B3E0517T046

1	Torque converter front chamber
2	Oil cooler
3	Torque converter pressure
4	Forward clutch pressure
5	3-4 shift valve
6	Shift solenoid E

7	Shift solenoid A
8	OFF
9	Solenoid reducing pressure
10	Line pressure
11	TCC control valve

TCC Engaging Operation

- When the PCM determines that TCC operation is smooth, it sends an on signal to the shift solenoid E to push the TCC control valve to the left. After engaging the torque converter front chamber and shift solenoid A, the PCM gradually increases the signal of duty ratio (50 Hz on time ratio) to shift solenoid A. As a result, the torque converter pressure acted on the torque converter front chamber is drained gradually by shift solenoid A. By reducing the torque converter pressure in the torque converter front chamber gradually in this way, the TCC is

pressed smoothly to the torque converter cover, and smooth TCC operation is possible.

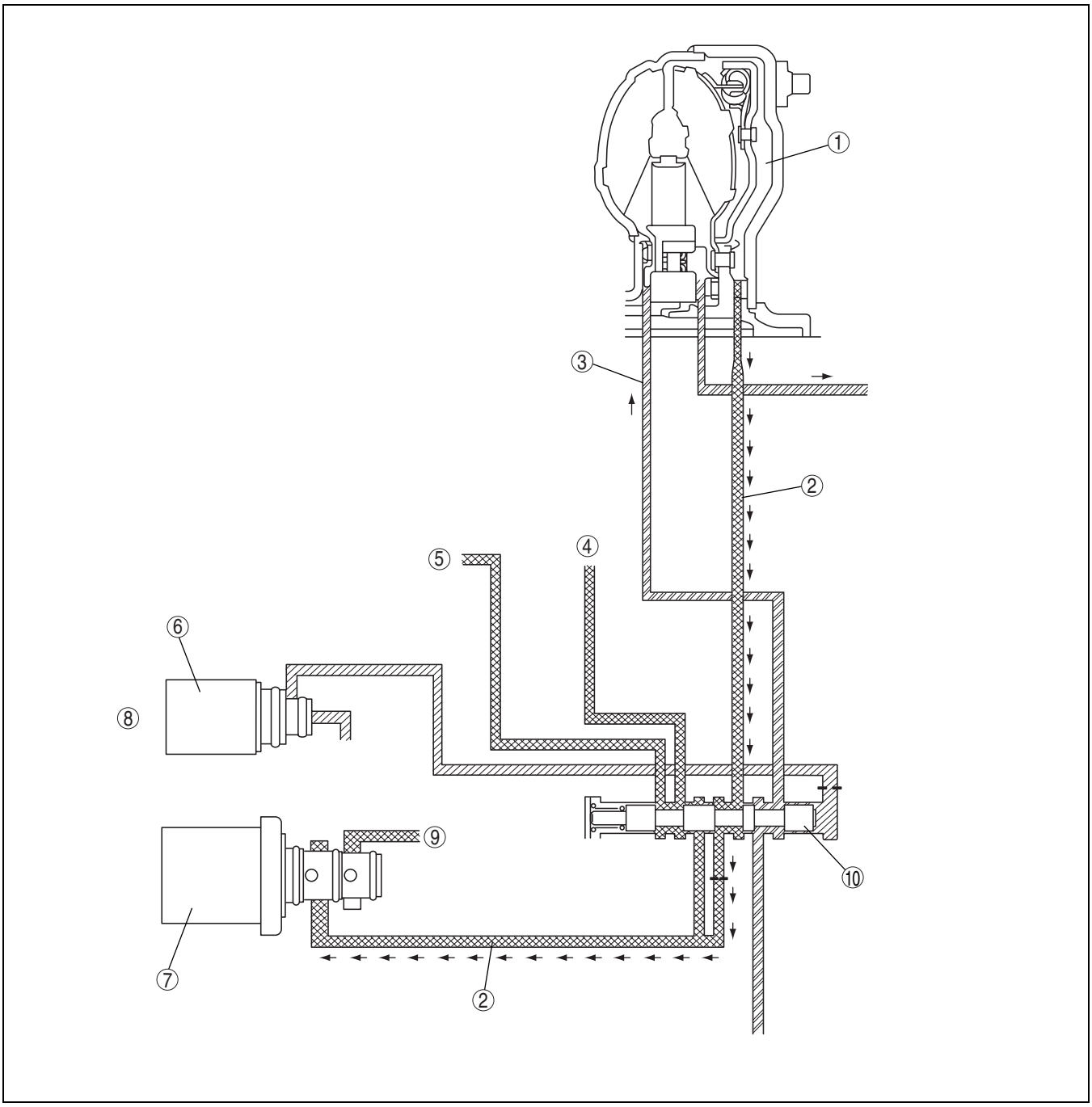

B3E0517T047

1	Torque converter front chamber
2	Torque converter pressure (drain)
3	Torque converter pressure
4	Forward clutch
5	3-4 shift valve

6	Shift solenoid E
7	Shift solenoid A
8	ON
9	Line pressure
10	TCC control valve

Determination of TCC Inhibition

- The TCC control is inhibited when any of the following conditions are met:
- Engine coolant temperature is below 60 °C {140 °F}
- ATF temperature is low
- Brake switch is on (when depressing the brake pedal)
- Accelerator depressing speed and accelerator opening angle are above specified value
- Engine speed signal is below specified value
- Malfunction is detected by diagnosis function.

SLOPE MODE CONTROL OUTLINE [FN4A-EL]

DPE051718880T18

- Climbing or descending is determined based on the engine output torque and the vehicle acceleration, and the shift gear is controlled to realize smooth vehicle driving.

Block diagram

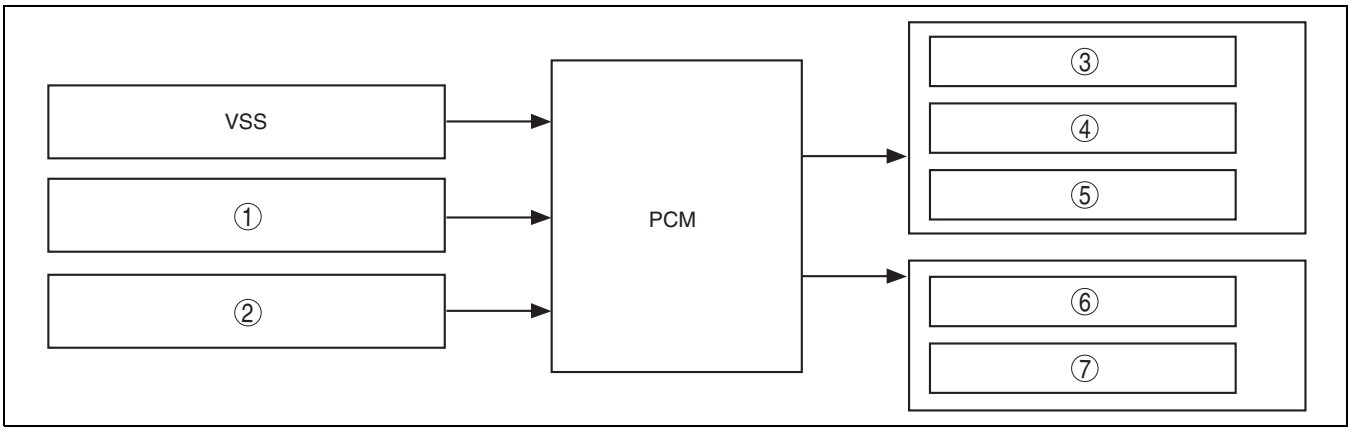

DPE517ZT1019

1	MAF sensor
2	Brake switch
3	Shift solenoid A
4	Shift solenoid B

5	Shift solenoid C
6	Shift solenoid D
7	Shift solenoid E

SLOPE MODE CONTROL OPERATION [FN4A-EL]

DPE051718880T19

Climbing hill

- When the hill is steeper than a specified grade, unnecessary shift up is prevented by holding an appropriate shift gear.

Descending hill

- When the descent is steeper than a specified grade and the brake switch is depressed, use of the brake pedal is reduced by shifting from 4GR to 2GR and applying the engine brake effectively.

COOLING SYSTEM OUTLINE [FN4A-EL]

DPE051719900T01

1. A water-cooled AT oil cooler installed to the converter housing has been adopted.
2. The oil cooler functions as follows:
   - ATF is cold: The ATF is warmed using coolant. (Warming function)
   - ATF is overly hot: The ATF is cooled using coolant. (Cooling function)
3. Since this oil cooler uses coolant from the heater, cold ATF is warmed rapidly causing the ATF viscosity to reduce rapidly. Reduction of friction within the AT results in improved fuel efficiency.

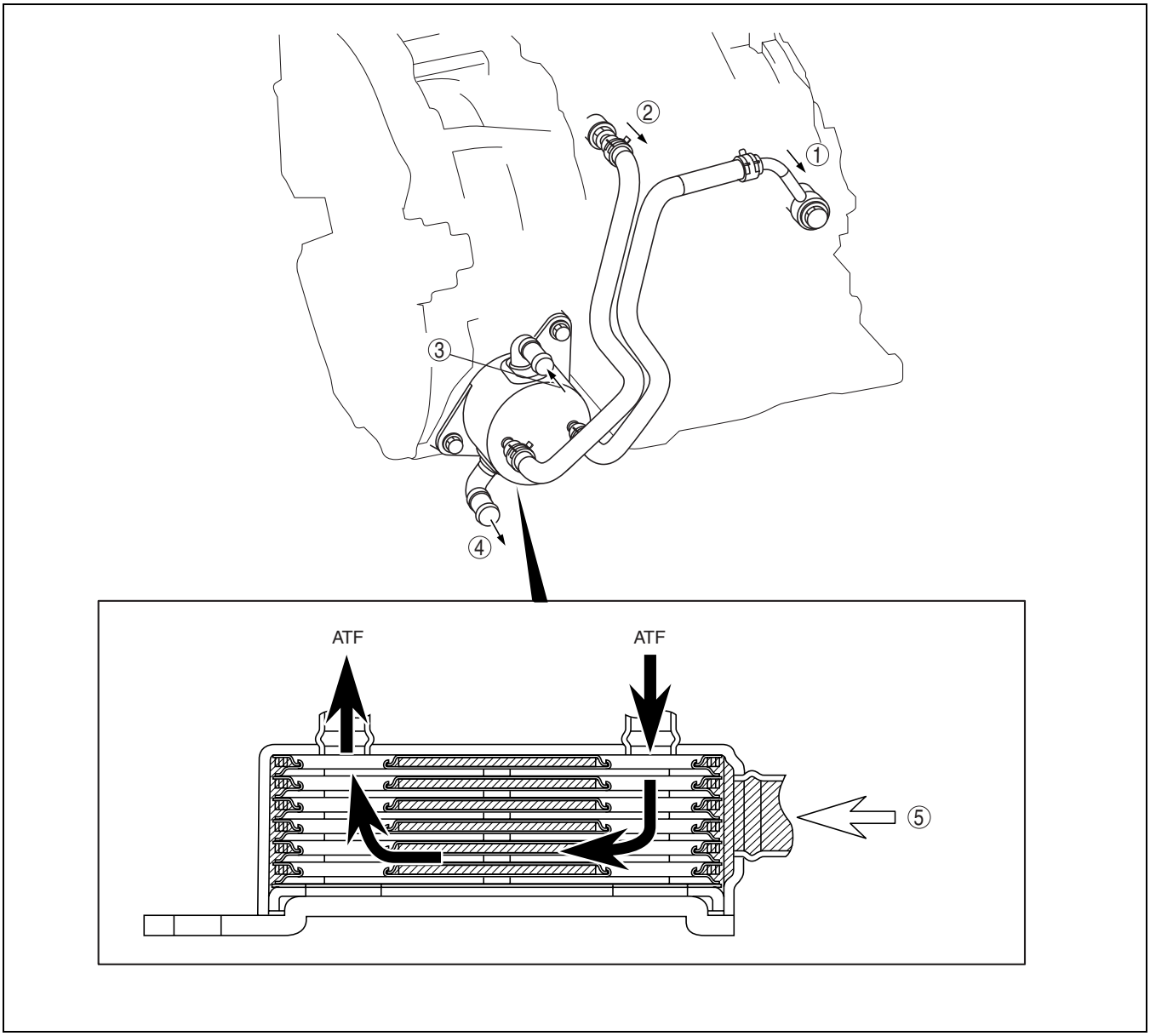

DPE517ZT1020

1	In
2	Out
3	Coolant in

4	Coolant out
5	Coolant

05–18 AUTOMATIC TRANSAXLE SHIFT MECHANISM

AUTOMATIC TRANSAXLE SHIFT MECHANISM OUTLINE 05–18–1
AUTOMATIC TRANSAXLE SHIFT MECHANISM STRUCTURAL VIEW 05–18–1
SELECTOR LEVER OUTLINE 05–18–2
SELECTOR LEVER STRUCTURE 05–18–2
SHIFT-LOCK SYSTEM OUTLINE. 05–18–4
SHIFT-LOCK SYSTEM STRUCTURE . . . 05–18–5
SHIFT-LOCK SYSTEM OPERATION. . . . 05–18–5
KEY INTERLOCK SYSTEM OUTLINE . . 05–18–8
KEY INTERLOCK SYSTEM STRUCTURE 05–18–8
KEY INTERLOCK SYSTEM OPERATION 05–18–10

AUTOMATIC TRANSAXLE SHIFT MECHANISM OUTLINE

DPE051846010T01

- The sport AT type shift mechanism has been adopted.
- To improve operability, a shift mechanism which the selector lever is located on the center of the dashboard has been adopted.
- To prevent inadvertent selection of the wrong gear, a key interlock device and a shift-lock device have been adopted.
- The shift-lock release mechanism has been adopted for emergency bypass assurance.

AUTOMATIC TRANSAXLE SHIFT MECHANISM STRUCTURAL VIEW

DPE051846010T02

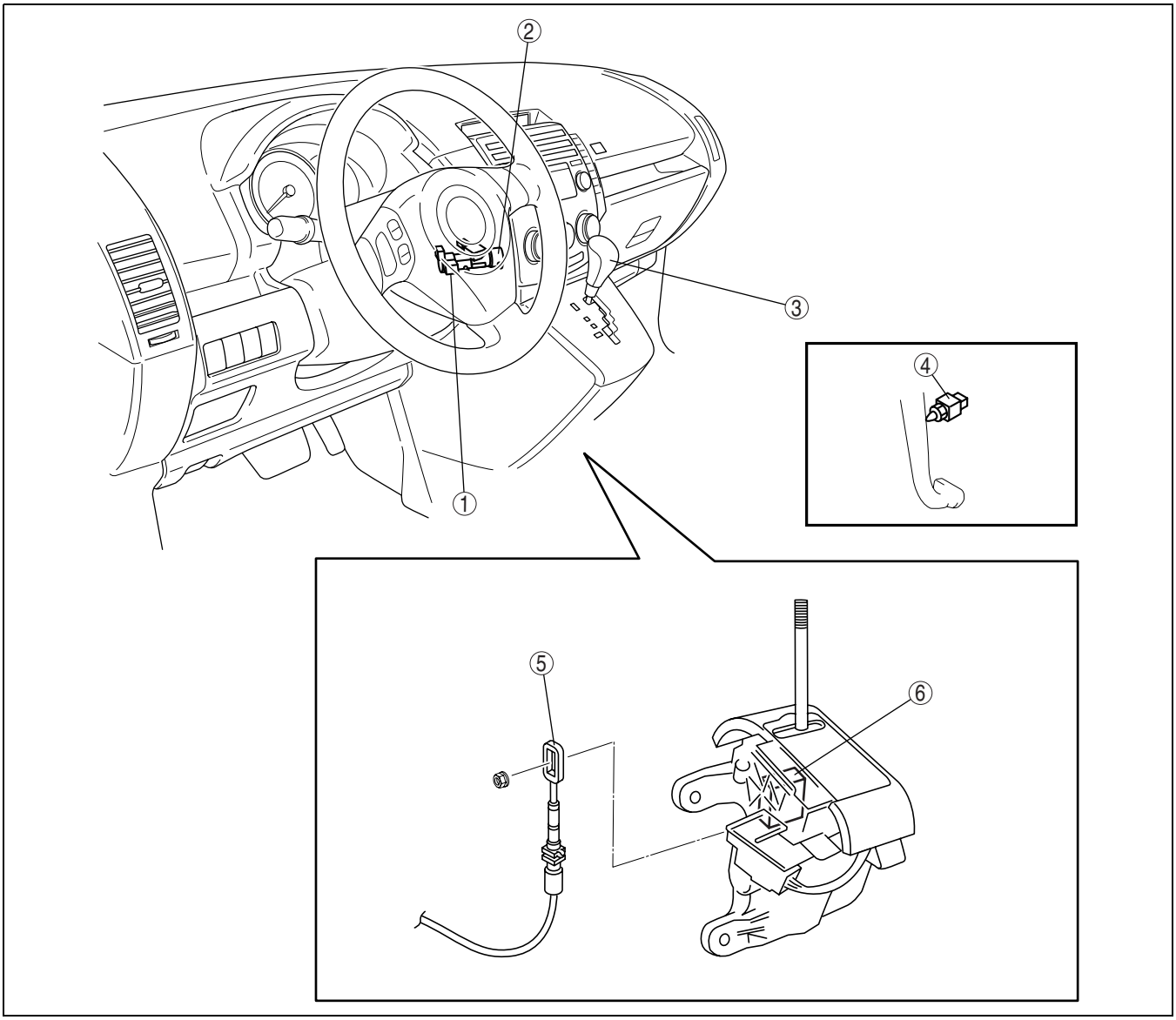

DPE518ZT1001

1	Key interlock solenoid
2	Steering lock

3	Selector lever
4	Brake switch

5	Selector cable
6	Shift-lock solenoid

SELECTOR LEVER OUTLINE

DPE051846010T03

- The selector lever is located on the center of the dashboard, improving operability.

SELECTOR LEVER STRUCTURE

DPE051846010T04

M Range Switch

Outline

- The M range switch detects the selector lever in M range position and sends a manual mode request signal to the PCM.

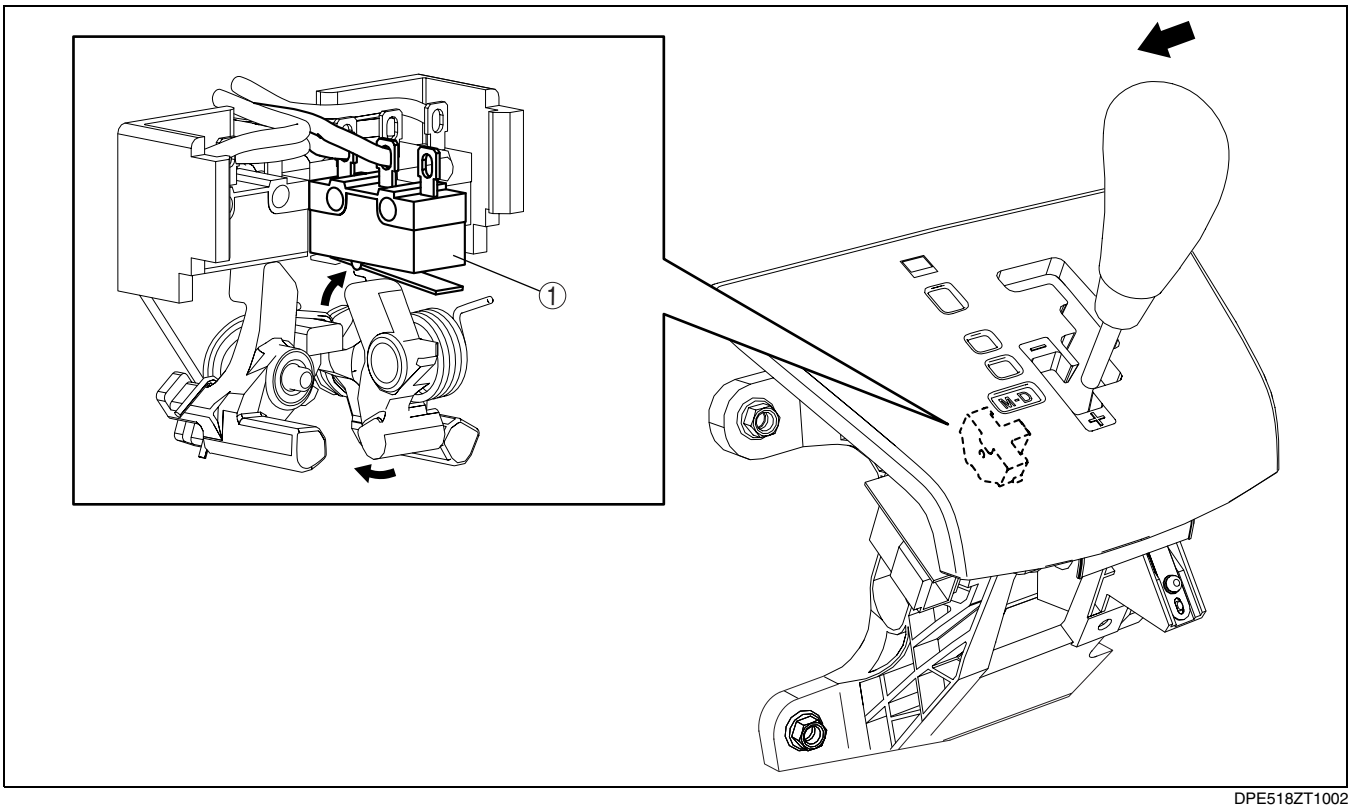

DPE518ZT1002

1	M range switch

Operation

- The M range switch is an on/off type switch that turns on when the selector lever is shifted to the M range. It also remains on during up-shift and down-shift operations.

Up Switch

Outline

- The up switch detects an up-shift operation in the M range and sends an up-shift request signal to the PCM.

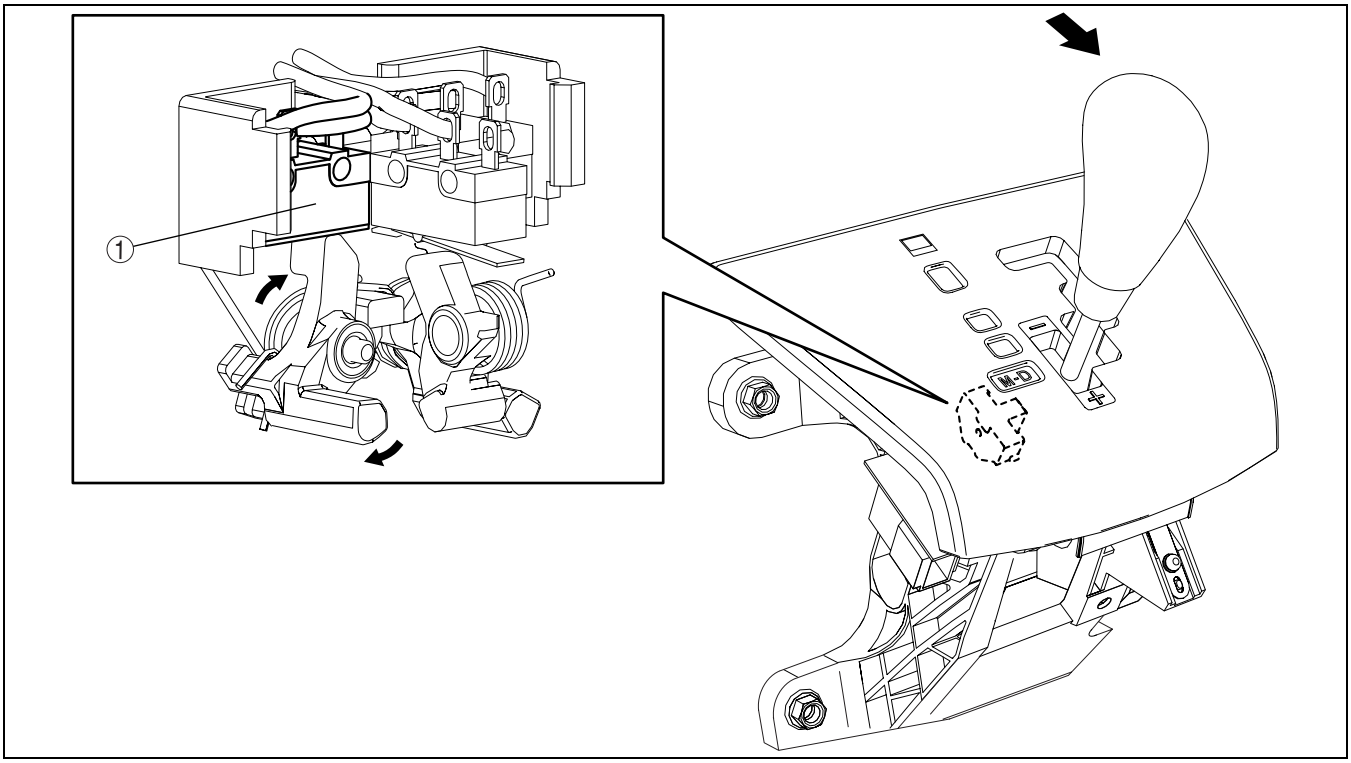

DPE518ZT1003

1	Up switch

Operation

- The up switch is an on/off type switch that turns on when the selector lever is in the M range (+) side position.

Down Switch

Outline

- The down switch detects a down-shift operation in the M range and sends a down-shift request signal to the PCM.

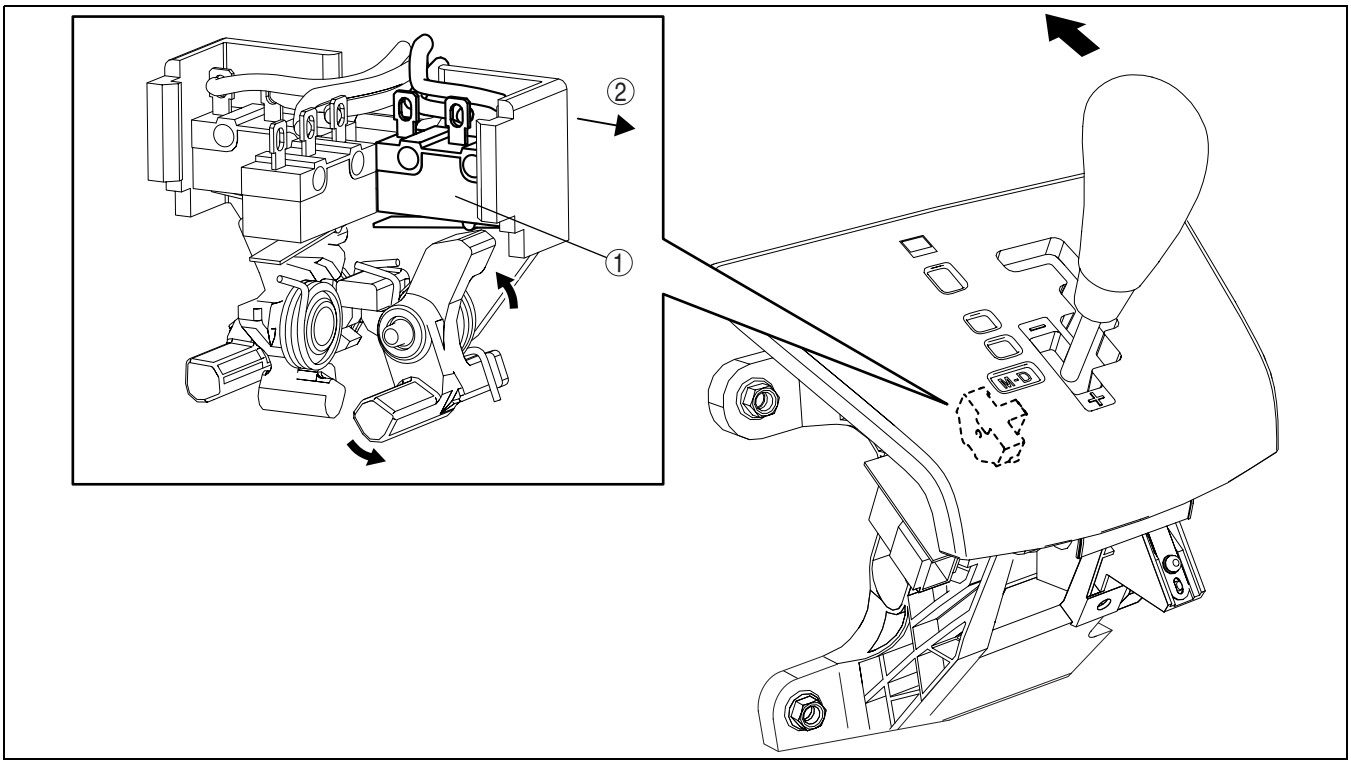

DPE518ZT1004

1	Down switch

2	Front side

Operation
- The down switch is an on/off type switch that turns on when the selector lever is in the M range (–) side position.

Not P Position Switch
Outline
- The Not P position switch detects if the selector lever is not in the P position. When detected, it sends a “Not P position” signal to the key interlock solenoid.

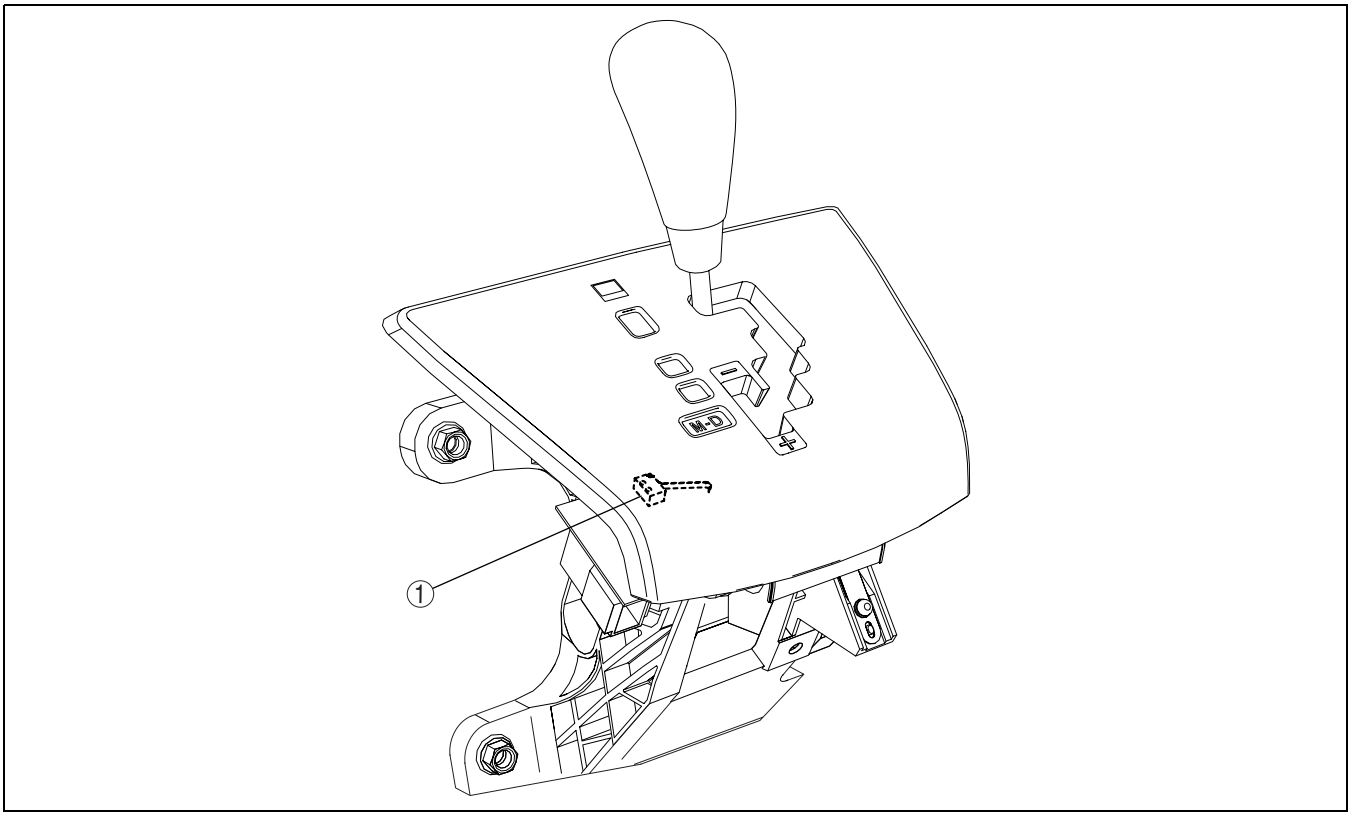

DPE518ZT1005

1	Not P position switch

Operation
- The Not P position switch is an on/off type switch which turns on when the selector lever is any position besides the P position.

SHIFT-LOCK SYSTEM OUTLINE

DPE051830000T01

- The shift-lock system prevents the selector lever from being shifted out of Park unless the brake pedal is depressed when the ignition switch is turned to the ON position.
- The shift-lock can be released manually by inserting a flathead screwdriver into the shift-lock release hole.

SHIFT-LOCK SYSTEM STRUCTURE

DPE051830000T02

- The shift-lock system consists of the brake switch, shift-lock solenoid, and selector lever component.

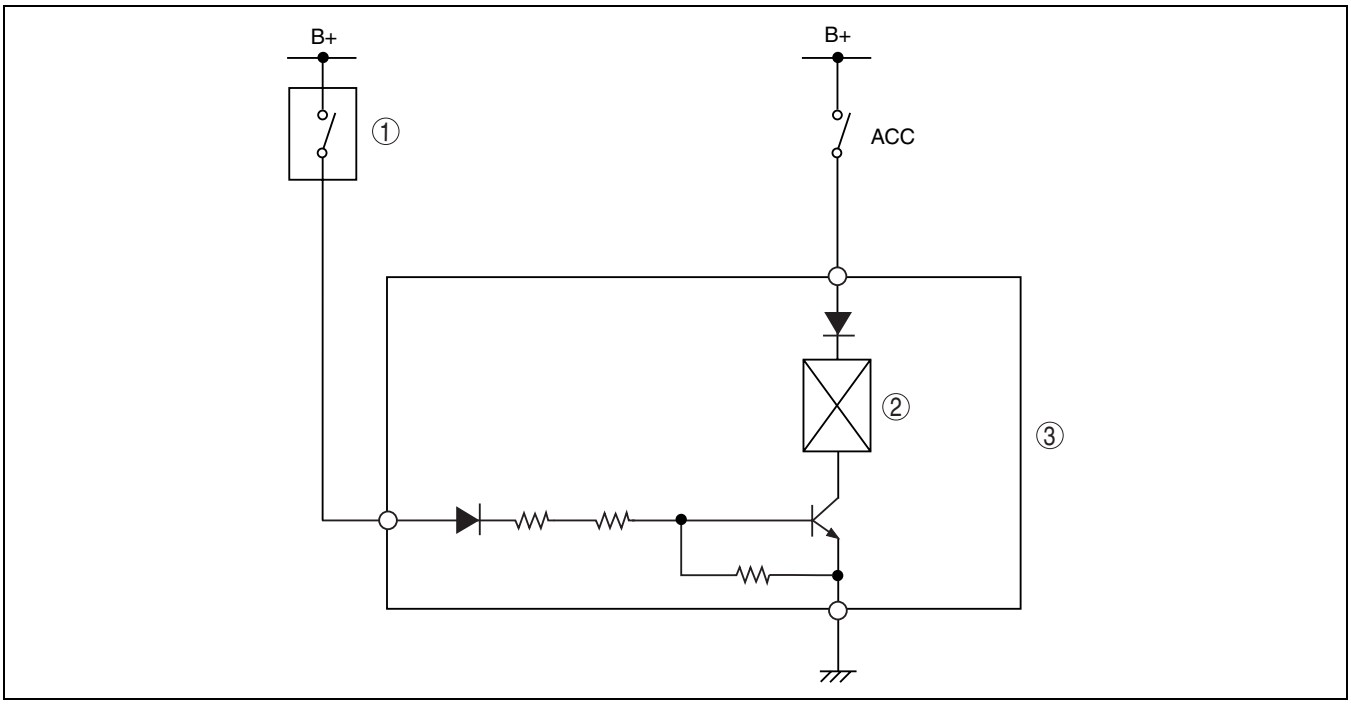

DPE518ZT1006

1	Brake switch
2	Shift-lock solenoid
3	Selector lever component

SHIFT-LOCK SYSTEM OPERATION

DPE051830000T03

Shift-lock Release Condition

- The shift-lock is released when the selector lever is in the P position, the ignition switch is in ACC position or ON position and the brake pedal is depressed.

Shift-lock Condition (When the shift-lock conditions are not satisfied)

- If the shift-lock conditions are not satisfied, electrical current does not flow to the shift-lock solenoid. The lock

slider therefore mechanically restricts the movement of the selector lever, preventing shifting out of Park.

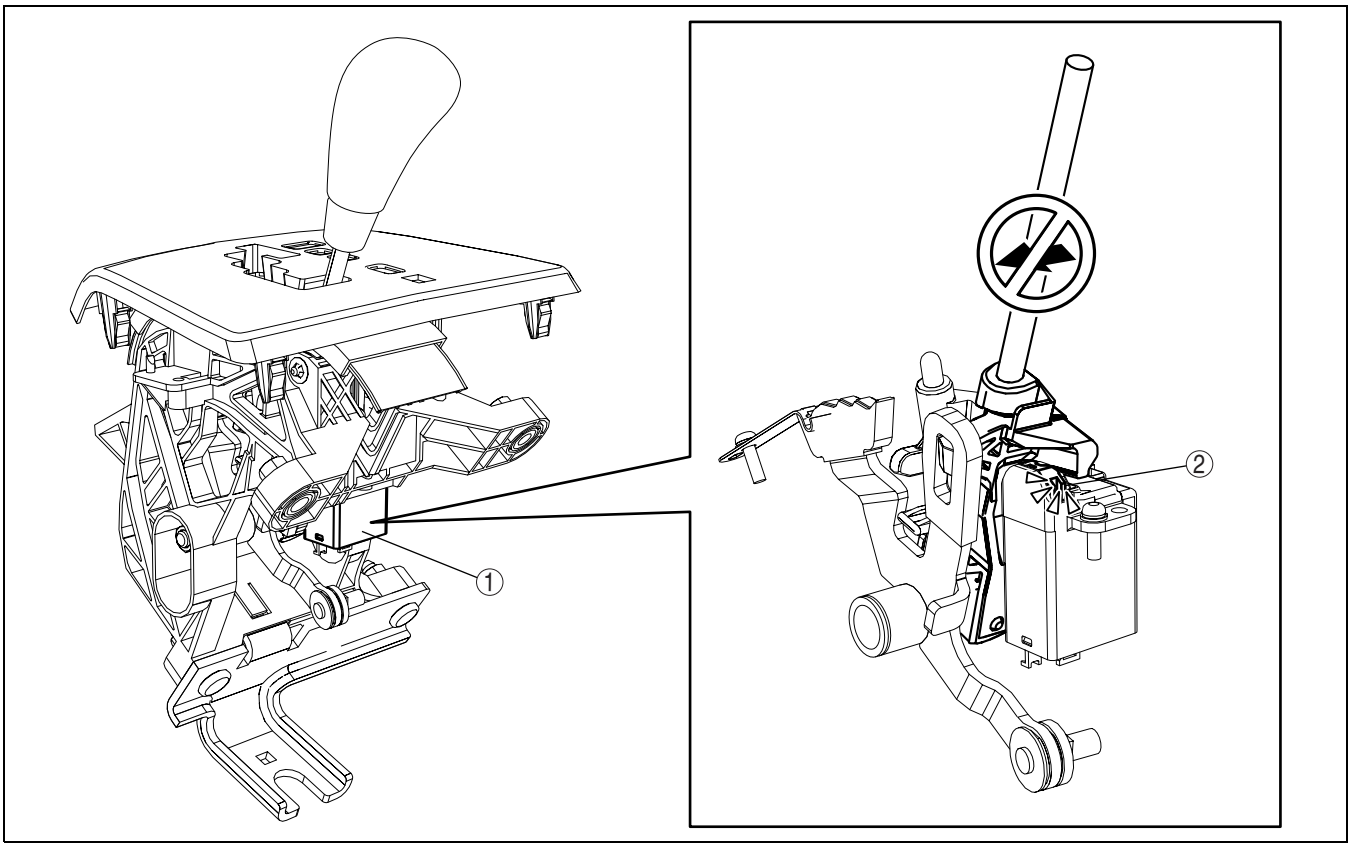

DPE518ZT1007

1	Shift-lock solenoid
2	Lock slider

Shift-lock Release Condition (when the shift-lock conditions are satisfied)

- If the shift-lock conditions are satisfied, electrical current flows to the shift-lock solenoid. The slider therefore moves toward the shift-lock solenoid and the lock slider moves to a position in which it does not restrict

movement of the selector lever, allowing shifting out of Park.

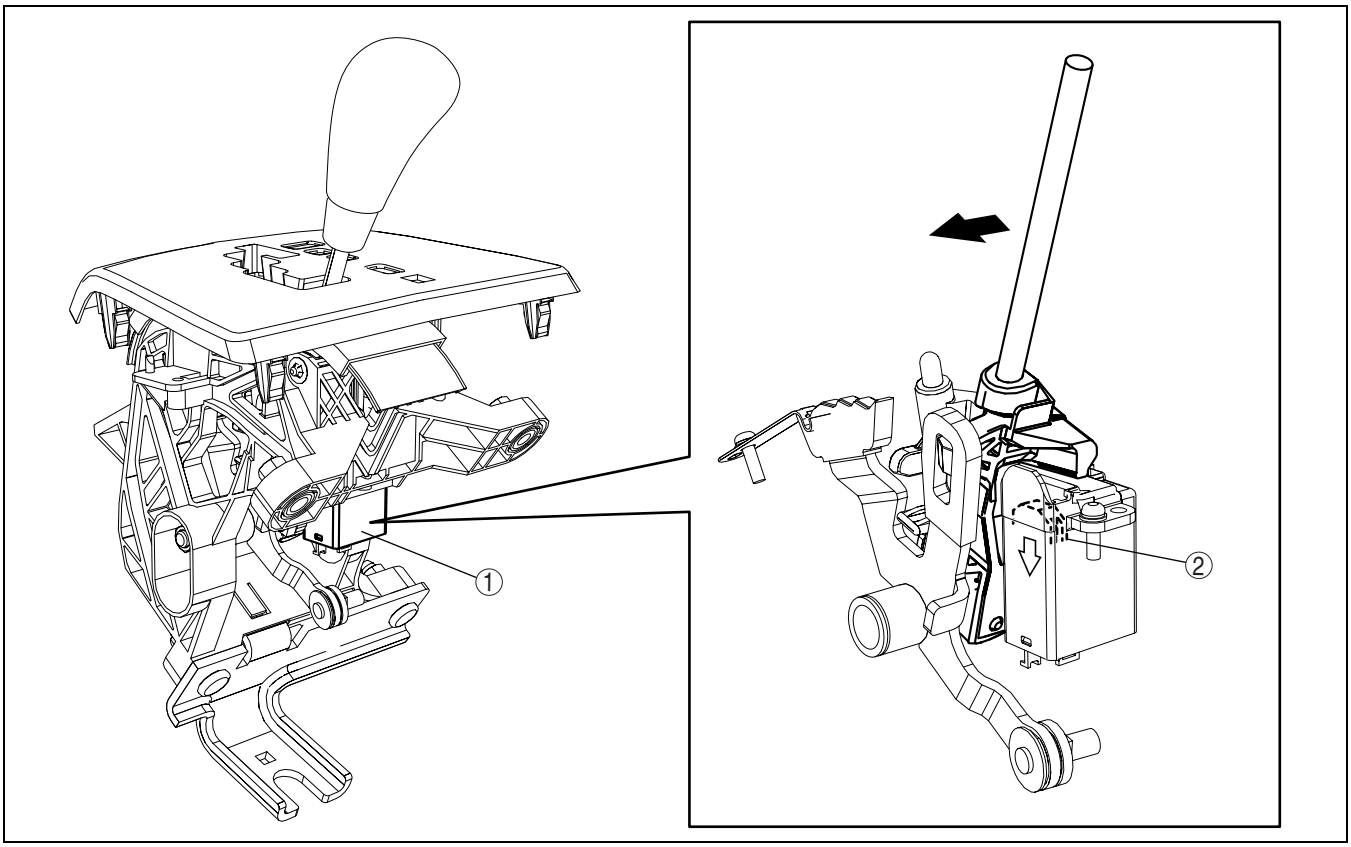

DPE518ZT1008

1	Shift-lock solenoid

2	Lock slider

Shift-lock Release Condition (when inserting a flathead screwdriver into the shift-lock release hole)

- To press down the lock slider, insert a flathead screwdriver into the shift-lock release hole, and press it against the release lever to lower the lever toward the shift-lock solenoid side. As a result, the selector lever is no longer

restricted by the lock slider and the shift lock is released.

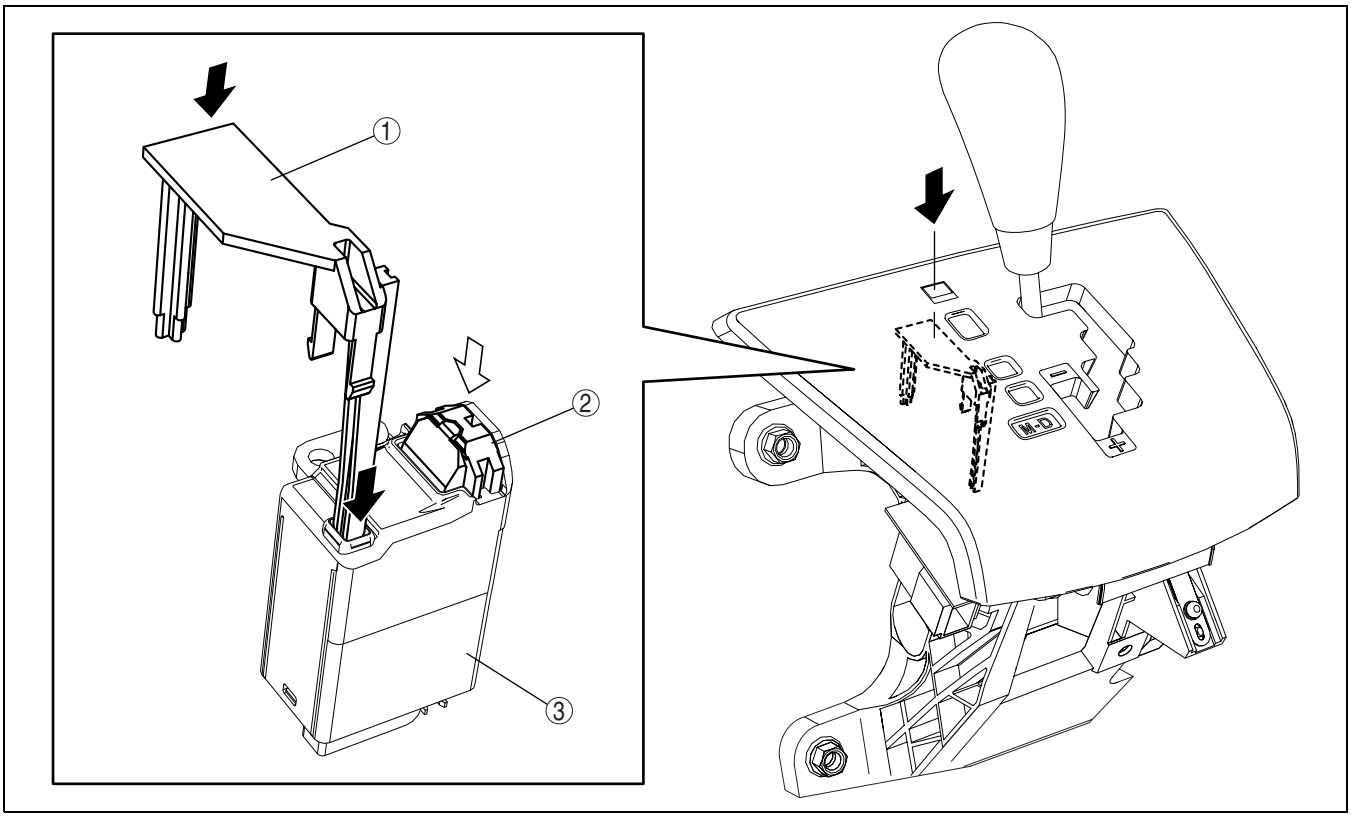

DPE518ZT1009

1	Release lever
2	Lock slider

3	Shift-lock solenoid

KEY INTERLOCK SYSTEM OUTLINE

DPE051809000T01

- The key interlock system allows the key to be removed only when the selector lever is in Park.

KEY INTERLOCK SYSTEM STRUCTURE

DPE051809000T02

Normal Key Type

- The key interlock system consists of the Not P position switch (built-in selector lever component), key interlock

solenoid, and steering lock.

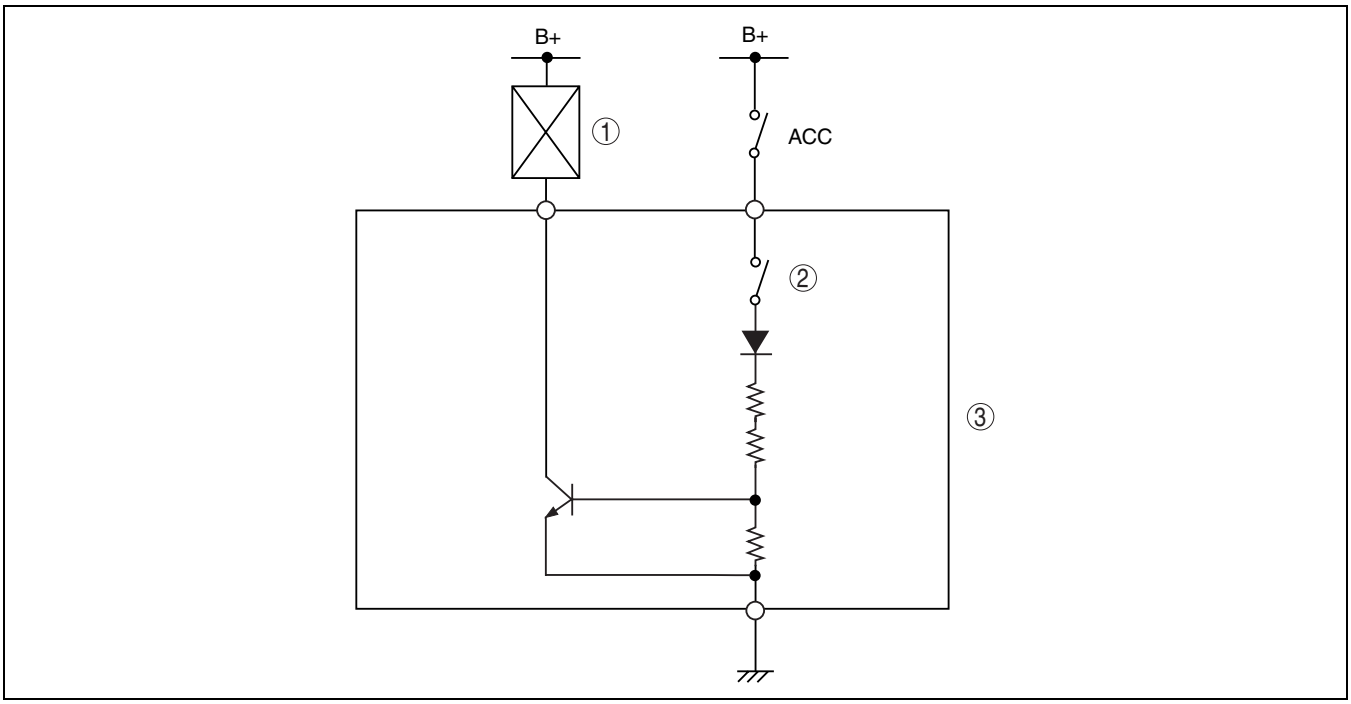

DPE518ZT1010

1	Key interlock solenoid
2	Not P position switch
3	Selector lever component

Advanced Keyless Type

- The key interlock system consists of the Not P position switch (built-in selector lever component), key interlock

solenoid, (built-in ignition switch), and ignition switch.

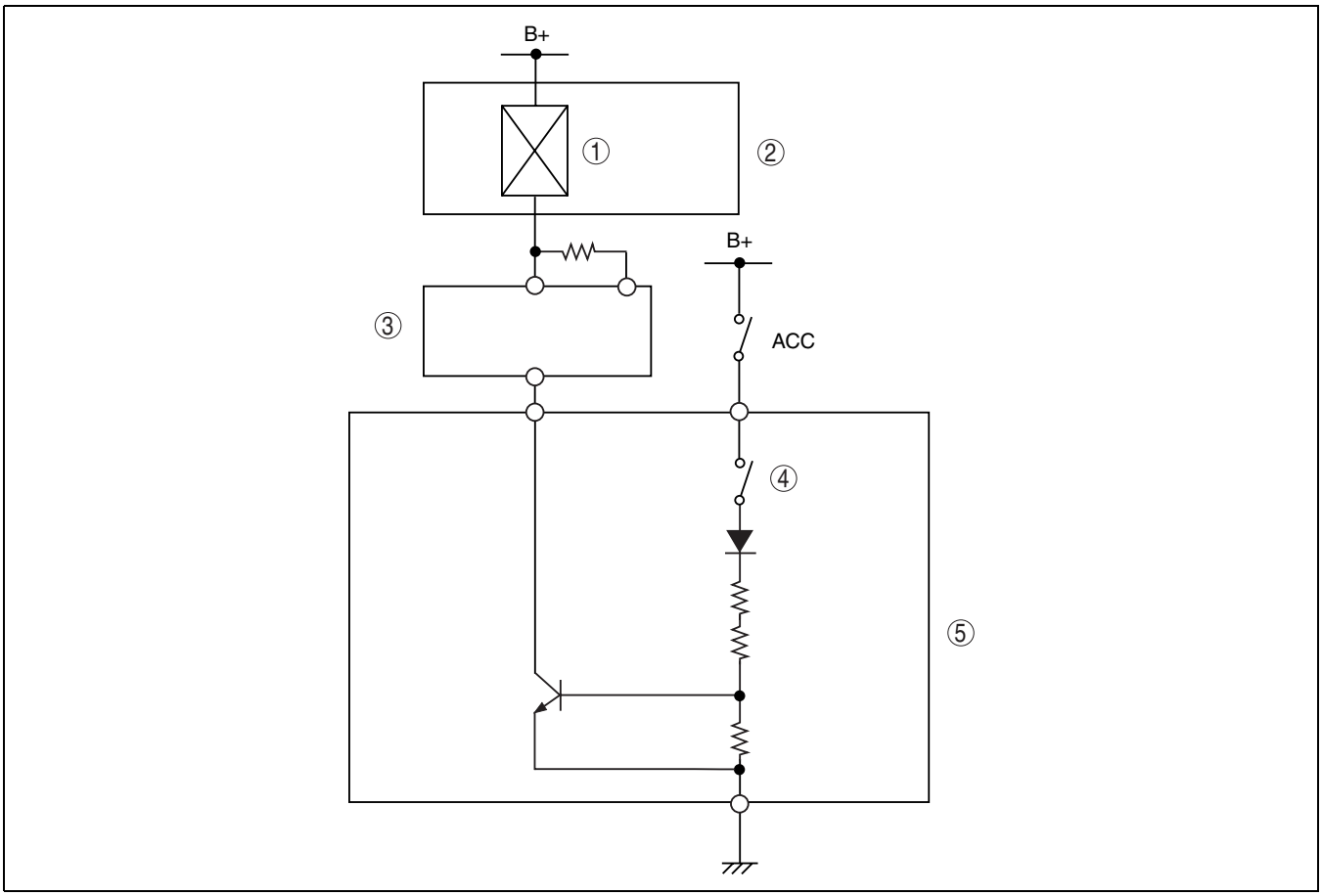

DPE518ZT1011

1	Key interlock solenoid
2	Ignition switch
3	Keyless control module

4	Not P position switch
5	Selector lever component

KEY INTERLOCK SYSTEM OPERATION

DPE051809000T03

Normal Key Type

Position other than Park (key interlock operates)

- The key interlock solenoid is energized when the selector lever is any position other than the P position. When the key interlock solenoid is energized, it pulls the solenoid slider, moving the stopper in the steering lock to

contact the cam. Due to this, the key cannot be turned to the LOCK position.

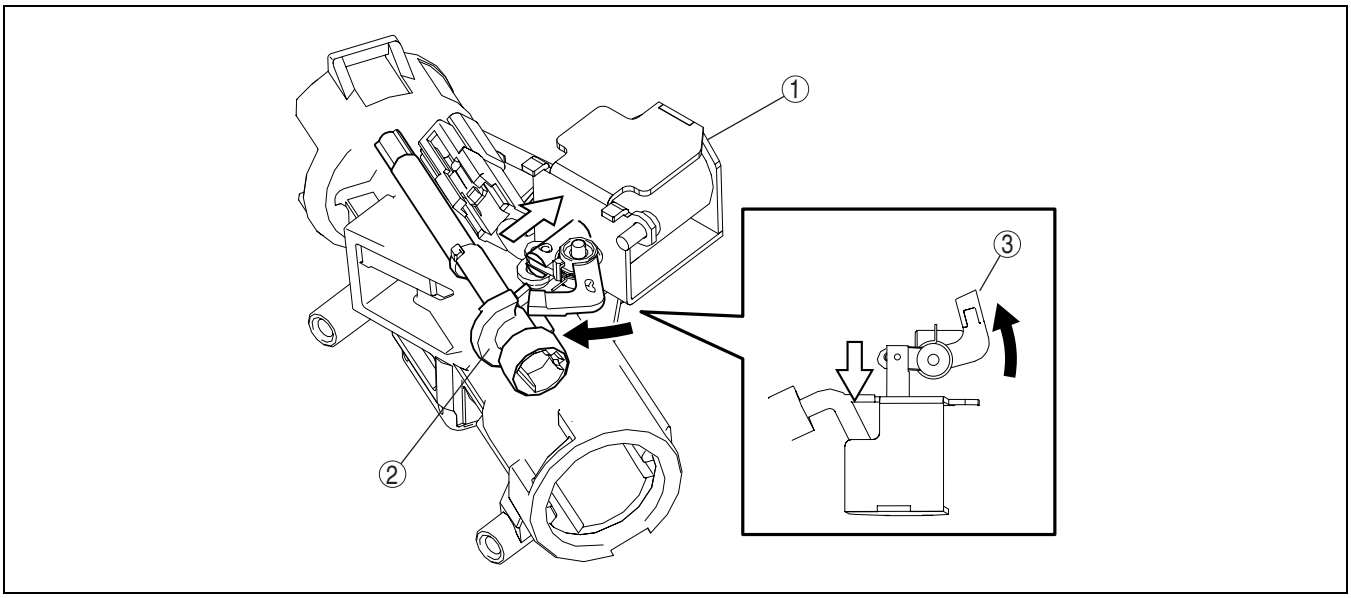

DPE518ZT1012

1	Key interlock solenoid
2	Cam

3	Stopper

Park Position (key interlock does not operate)

- The key interlock solenoid is not energized when the selector lever is in the P position. The key interlock solenoid slider is pushed by the return spring, releasing the stopper in the steering lock from the cam. Due to this, the key can be turned to the LOCK position.

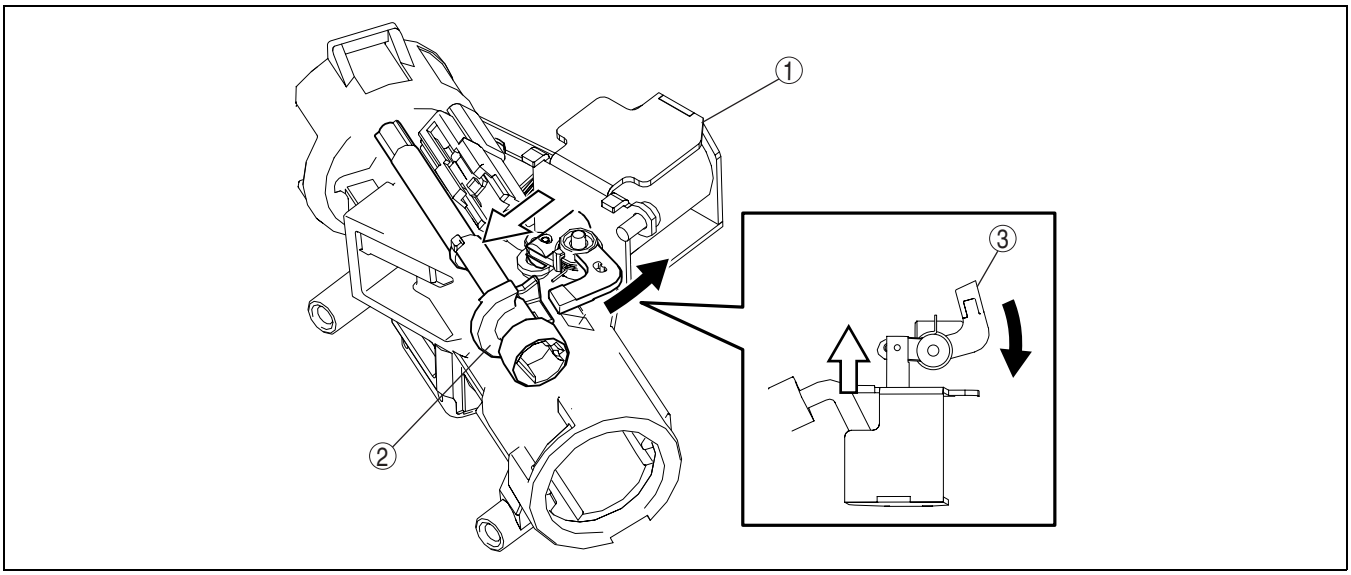

DPE518ZT1013

1	Key interlock solenoid
2	Cam

3	Stopper

Advanced Keyless Type

Position other than Park (key interlock operates)

- The key interlock solenoid is energized when the selector lever is any position other than the P position. When the key interlock solenoid is energized, it comes out the stopper in the key interlock solenoid to contact the

notch of the rotor of the ignition switch. Due to this, the key cannot be turned to the LOCK position.

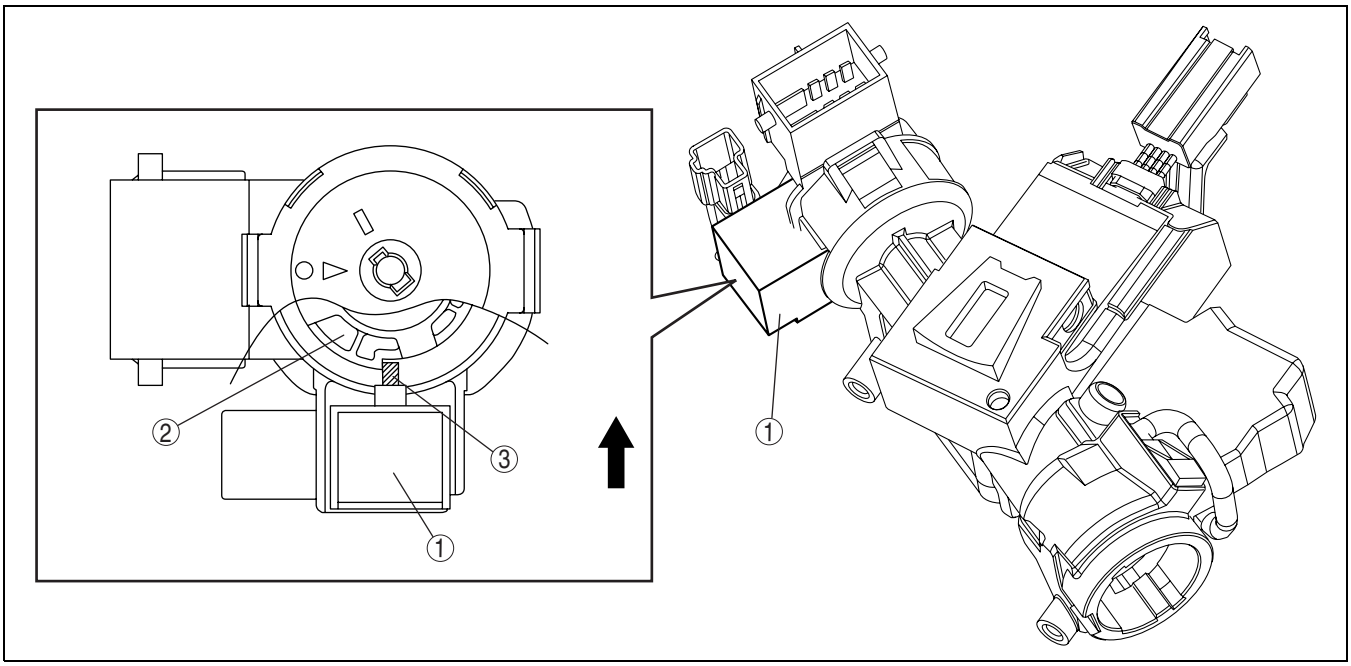

DPE518ZT1014

1	Key interlock solenoid
2	Rotor

3	Stopper

Park position (key interlock does not operate)

- The key interlock solenoid is not energized when the selector lever is in the P position. The stopper in the key interlock solenoid is pulled by the return spring releasing the stopper from the rotor. Due to this, the key can be turned to the LOCK position.

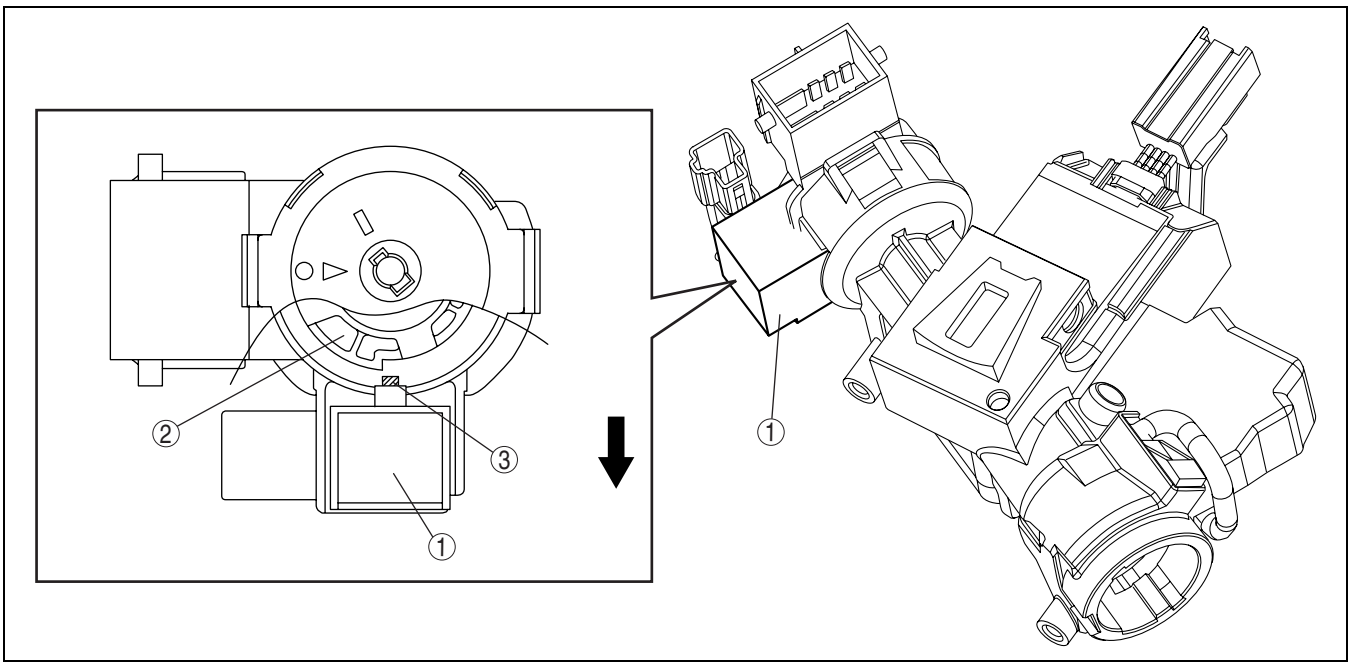

DPE518ZT1015

1	Key interlock solenoid
2	Rotor

3	Stopper